HOT BEVERAGE SYSTEM

Operation and Service Manual

Software Version 6.1

VKI
TECHNOLOGIES INC.

SUPREMA 2001 - OPERATION & SERVICE MANUAL

TABLE OF CONTENTS

This table contains integrated hyperlinks (identified in blue or purple). If viewing this file on a computer, click on the section you would like to see and you will be linked there automatically.

OVERVIEW OF COMPONENTS 4

SELECTION PANEL & INTERIOR DOOR PANELS 4

UNPACKING AND SETTING UP 5
- Unpacking the Equipment 5
- Removing Shipping Materials 6
- Connections and Adjustments 6
- Applying the Fascia 7
- Applying the Inner Door Decals 7
- Installing Carafe Tray, Cup Stand & Bezel 8
- Water Connection 8

INSTALLATION AT AN ACCOUNT 9
- Placement of the Equipment 9
- Water Filter 9
- Connecting to a Water Supply 10
- Running Copper Tubing 11
- Finishing Touches 12

PROGRAMMING THE EQUIPMENT 13

COUNTERS
- Viewing and Resetting Counters 13
- Coin Dispense 14
- Total per Selection Counter 14
- Total Counter Reset & Access Code 15

SET-UP MODE
- Set-Up Mode & Access Code 16
- Product ON/OFF 17
- Setting Products 17
- Setting Water 18
- Setting Prices 18
- Enabling Switches 19
- Canceling Individual Selections 19
- Default Setting 20
- Top Pause 20
- Bottom Pause 21
- Maximum Number of Cups per Carafe 21
- Frequency of Messages 22
- Service Counter 22
- Bottom Pause Delay 23
- Canceling Messages 23
- Free Vend Key Switch Set-Up 24
- Empty Grounds Container Message 24
- Number of Chocolate Pump Cycles 25
- Double-Cup Feature 25
- Temperature 26
- Custom Message 26
- Language 27
- Water Level Probe 27
- Post-Mix 28
- Locking the Counters 29
- Force Vend Feature 29

OPERATION INFORMATION 30
- Resetting Coffee and Chocolate Refill Messages 30
- Priming the Chocolate Pump 31
- System Status Indicators 31
- General Information 32
- Chocolate Rinse Cycle 33
- Brewer Rinse Cycle 34

DOWNLOADING SOFTWARE AND TRANSFERRING SETTINGS 35
- Downloading Software Updates 35
- Transferring Settings 37

INDICATOR MESSAGES 39

REPLACING MAJOR COMPONENTS 42
- Brewer 42
- Brewer Motor 43
- Inlet Valve 44
- Outlet Valves 45
- Water Tank Assembly 46
- Water Tank Lid Assembly 47
- Heater Element 48
- Drain Valve 49
- Ingredient Dispenser 50
- Ingredient Dispenser Motor 51
- Front Board 51
- Rear Circuit Board 52
- Fuse Box Assembly 53

WIRING DIAGRAMS 54
- Electrical Diagram 54
- Brewer Harness 55
- Overflow Harness 55
- Temperature Probe Harness 55
- Chocolate Pump Harness 55
- Fuse Box Harness 56
- General Harness 56
- Water Tank Harness 57

COIN CHANGER INSTALLATION 58
- Installing the Coin Changer 58
- Installing the Pricing Decals 59

➢ ***Note:*** ***For a complete description of the hardware and software differences between the Vista NT models and the Suprema 2001 model, please consult page 3 of this manual.***

DIFFERENCES BETWEEN THE VISTA 3 AND THE SUPREMA

Although the Vista NT models and the Suprema 2001 are fairly similar models, there are some major differences that should be noted. These differences are outlined below.

HARDWARE

- The front door has been redesigned to have a more modern look.
- The color scheme of the complete unit has changed to black with gold trim.
- The layout of the front selection panel has been changed to make the equipment more user-friendly.
- The water tank is equipped with electronic water level probes that replace the mechanical float and switch assembly.
- The water tank uses three Deltrol outlet valves – the Muller valve previously used for coffee water has been replaced.
- The Suprema is designed to use only the Zuma brewer. The paper brewer is no longer supported by hardware or software in the equipment.

SOFTWARE

- The "**SET REWIND**" message has been replaced by the "**EMPTY GROUNDS CONTAINER**" message. Setting up the counter for this message has not changed. More information is found in this manual.
- There is no carafe button on the selection panel. The large cup setting can be designated for carafe in the Set-up mode.
- If the large cup is set for carafe and double-cup, the carafe setting overrides the double-cup setting.
- If no default setting is selected, the LED's will scroll from selection to selection, and the user will need to select the setting required.
- The hot water can no longer be set to "**PRESS & HOLD**".
- It's not possible to disable all the cup sizes, strengths or products in the "**ENABLE SWITCH**" menu. If everything is disabled, the equipment will automatically enable the coffee, medium strength, and medium cup size.
- When a mixed beverage is selected ("**CAFÉ MOCHA"** or "**MIXED POWDER BEVERAGE"**), it is mixed with regular strength coffee ***only***. It cannot be mixed with decaf, and the strength cannot be changed.
- To download software updates, the "**50/50**" button or the "**MEDIUM**" strength button must be pressed while switching the power on, as there is no longer a designated carafe button on the front selection panel.

OVERVIEW OF SUPREMA COMPONENTS

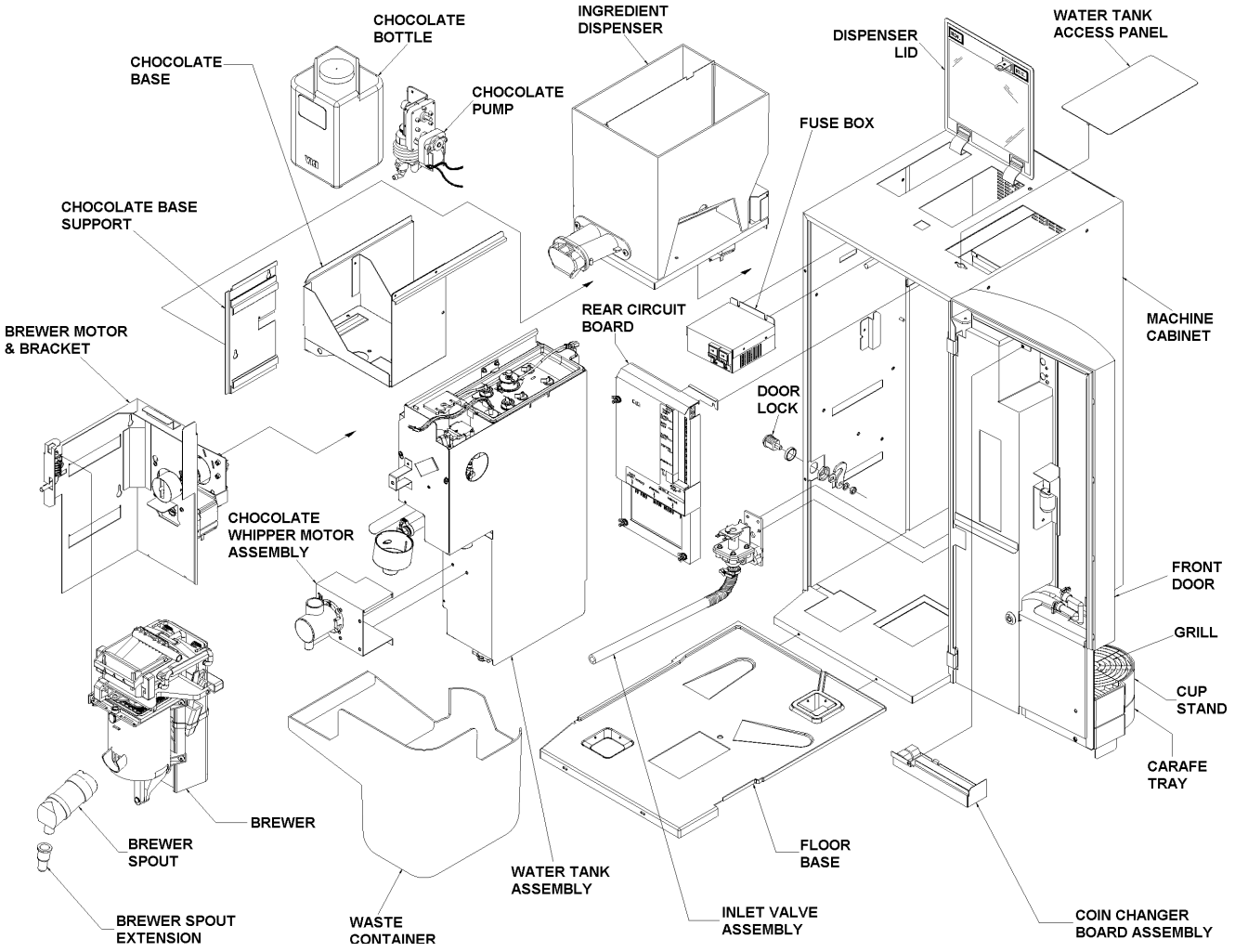

SELECTION PANELS & INTERIOR DOOR PANELS

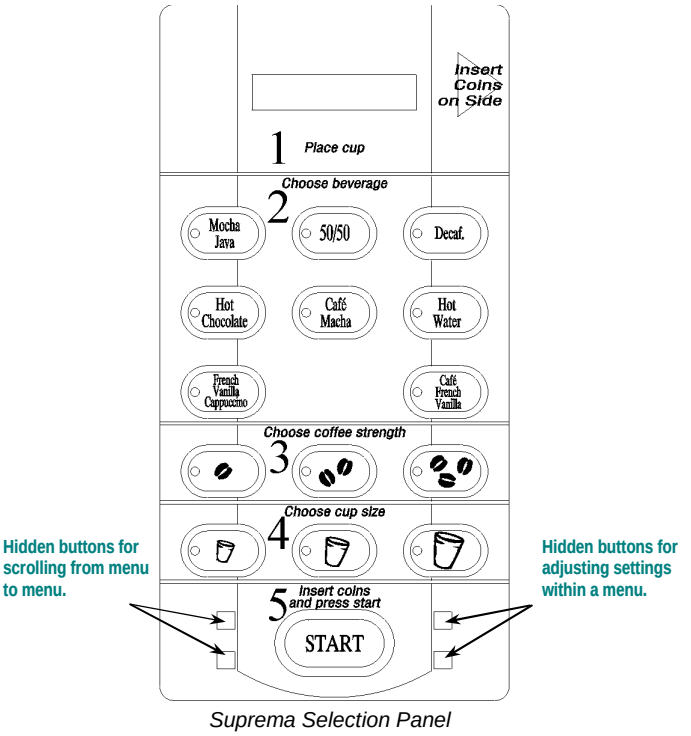

Suprema Selection Panel

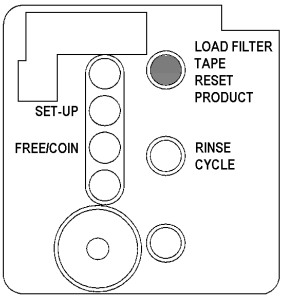

Suprema Interior Door Panel

SET-UP - Provides access to the programming and to the configuration of the machine.

FREE/COIN - Toggles the machine from "**FREE**" mode to "**COIN**" mode. Red indicator LED will be lit when the machine is in "**FREE**" mode.

OPEN BREWER / RESET PRODUCT - This button is red to simplify identification for the caretaker. It opens the brewer to perform maintenance.

RINSE CYCLE - Provides access to the rinse cycles for the brewer and chocolate components.

UNPACKING & SETTING UP THE EQUIPMENT

UNPACKING THE EQUIPMENT

➢ ***Note:***
Prior to signing for any type of delivery, check all packages for shipping related damage.

If equipped with a "Tip-N-Tell" indicator, check the status of the indicator and note any damage on the bill of lading.

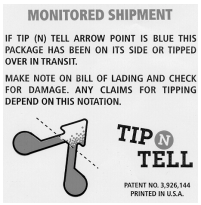

Check the shipping carton for shipping damage, prior to signing for the delivery. If any damage is evident, indicate the damage on the delivery slip before signing. Make certain that the driver signs in recognition of the damage. The carton left the factory free from damage. If there is damage, the claim is to be made with the carrier, and not with VKI Technologies.

1. **Remove the coffee maker from its shipping carton.**
   a) Lay the coffee maker on its side.
   b) Cut the tape on the bottom of the carton.
   c) Fold the flaps outwards and cut off the bottom flap.
   d) Remove the polystyrene (foam) packing material, and cut the plastic bag with scissors, as indicated in figure 3.
   e) Turn coffee maker upright and lift off the carton.
   f) Remove the remaining polystyrene packing and the plastic bag.
   g) Remove the decal package and set it aside, for the moment.

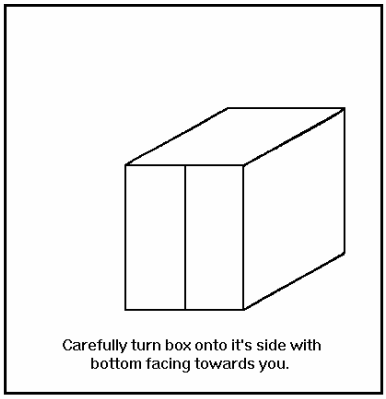

FIGURE 1

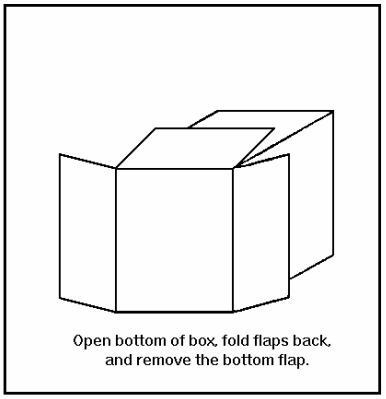

FIGURE 2

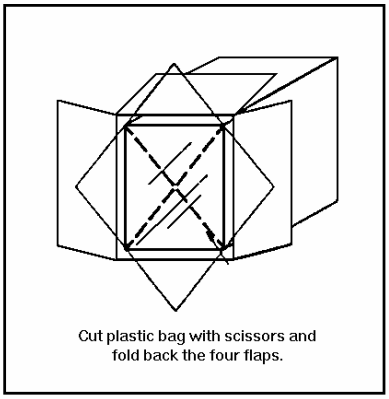

FIGURE 3

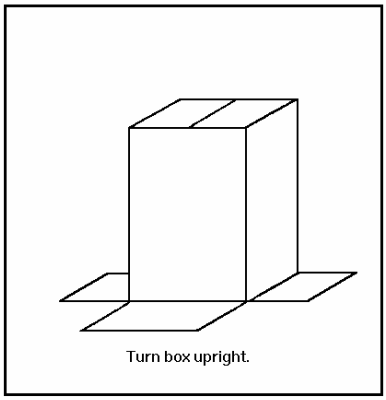

FIGURE 4

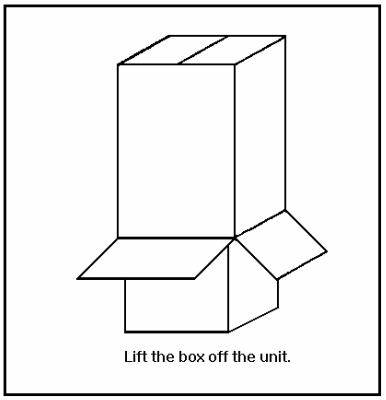

FIGURE 5

FIGURE 6

REMOVING SHIPPING MATERIALS

2. **Lift and place the coffee maker onto your workbench.**

WARNING: Never lift the machine by placing your hand underneath the front door. It is not designed to support the weight of the machine, and serious personal injury and/or damage to the unit may occur.

3. **Open the outer and inner doors.**
   a) There are two sets of keys attached to an envelope on the service cord. The keys numbered 8625 are for the outer door. The keys numbered 8645 are for the inner door.

4. **Remove all the shipping tape.**
   a) Shipping tape is found in the following areas: Valve cover, Service cord, Brewer spout, Cup Trays.

WARNING: Do not connect the service cord to the wall outlet at this point as more adjustments are still required to the machine.

CONNECTIONS AND ADJUSTMENTS

When the water tank is drained after testing at the factory, it is possible for the element may remain hot for a short while afterwards and trigger the thermal cut-off switch.

5. **Reset the thermal cut-off switch.**
   a) Remove the valve cover (figure 1) on the front of the hot water tank.
   b) Remove the plastic wing-nut securing the water tank access panel to the top of the machine.
   c) Remove the water tank access panel.
   d) Press the "**reset**" button on the thermal cut-off switch (figure 2).

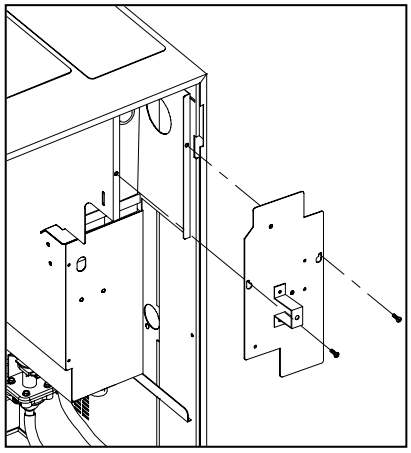

Figure 1 - Remove valve cover.

6. **Re-install the water tank access panel, and the valve cover.**

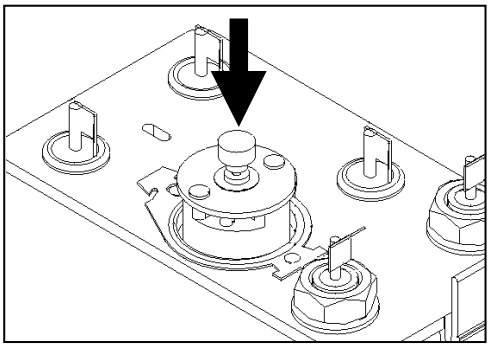

Figure 2 - Reset the thermal cut-off switch.

APPLYING THE FASCIA

7. Apply the fascia to the Suprema front door.

a) Peel the backing paper from the rear of the fascia (Figure 3).

b) Align the fascia inside the plastic trim around the selection panel, making certain that the fascia does not interfere with the buttons.

c) Once aligned, press the fascia firmly in place (Figure 4).

> ➢ ***Note:***
> ***Do not apply any pressure to the fascia until it is placed in the proper position. This way, if it is not in the right place, you can carefully peel it off and re-position it.***

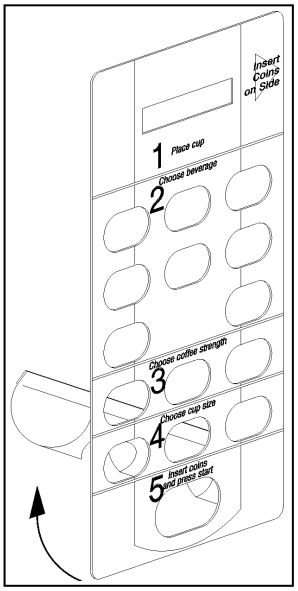

Figure 3 – Remove Backing

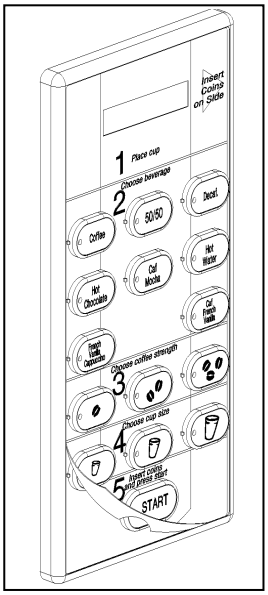

Figure 4 – Install Fascia

APPLYING THE INNER DOOR DECALS

8. Apply the "Care and Maintenance" decal.

a) Open the outer door.

b) Peel off the lower half of the backing paper.

c) Align the upper half of the decal with the right side of the inner door.

d) When satisfied with the alignment, apply the lower portion of the decal to the door surface.

e) Lift the upper portion of the decal and remove the backing paper.

f) Apply pressure to the upper half of the decal, from the center outwards.

9. Apply the "Diagram" decal.

a) Peel the backing from the decal.

b) Align the decal below the inner door grounds deflector.

c) When satisfied with the alignment, apply pressure to the decal.

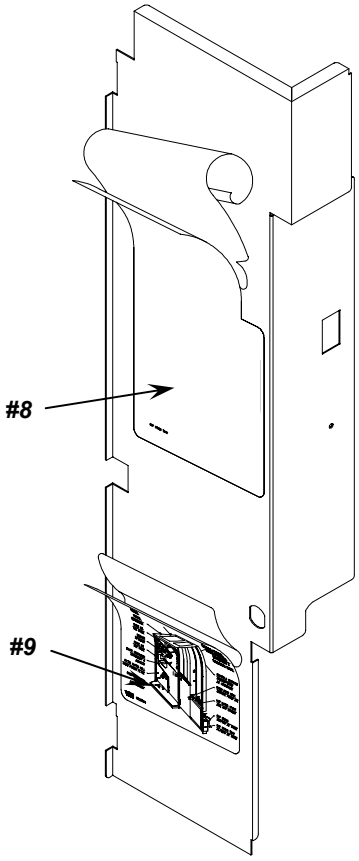

INSTALLING THE CARAFE TRAY, CUP STAND AND GRAPHICS BEZEL

10. Install the carafe tray, cup stand and graphics bezel.

a) Install the carafe tray as illustrated below. Once done, install the cup stand on top of the carafe tray.

b) Install the bezel by first inserting the tabs on bottom if it into the notches on the door. Push the top of the bezel into the door until it clips in place.

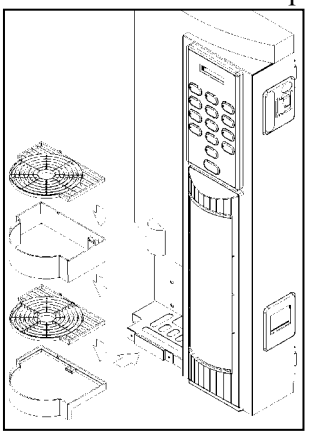

◄ Install the carafe tray (and grill) and the cup stand (and grill).

► Install the pre-assembled graphics (and pricing) bezel.

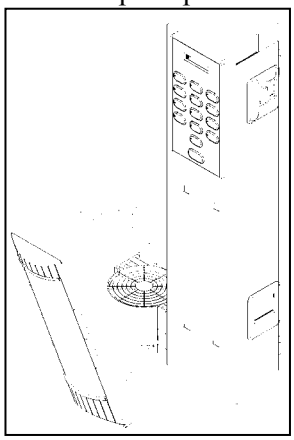

WATER CONNECTION

11. Connect the water supply to the coffee maker.

a) Apply Teflon tape to a 3/8" plumbing fitting. If a 1/4" line is being used, you will then need a 1/4 x 3/8" fitting.

- *Teflon tape should be applied in a clockwise direction, going with the threads when tightening.*

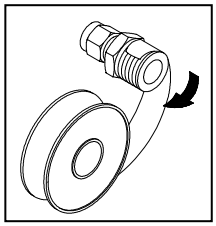

b) Thread the fitting into the inlet valve at the back of the coffee maker and tighten with a wrench.

d) Connect the water line to the fitting.

e) Turn the water on at the source.

f) Plug the coffee maker into the wall outlet.

➢ ***Note:***
For initial water connection at your shop, we recommend using 1/4" polytubing, and an instant (quick connect) fitting. This will simplify water hook-up. For field installation, we recommend copper tubing from the source, all the way to the coffee maker.

12. Switch the coffee maker "ON".

a) The main power switch is found on the back of the coffee maker.

b) When the power is switched "**ON**", you should hear the coffee maker filling with water.

c) Check the plumbing for leaks and correct them, if necessary.

d) Check the display for any messages, and take the indicated action.

13. Fill the ingredient dispenser with coffee.

a) Open the front door of the coffee maker.

b) Lift the lid on top of the coffee maker.

c) One section of the ingredient dispenser is larger than the other. The large section is for the coffee that is expected to have higher consumption. The smaller is for decaffeinated or lower consumption blends.

d) Fill the ingredient dispensers by pouring coffee through the opening in the lid.

INSTALLATION AT AN ACCOUNT

This section will assist you with the initial installation, taking into account several possible circumstances. While not all can be described here, this information can be used in nearly all types of plumbing you will encounter at a new account.

PLACEMENT OF THE EQUIPMENT

The location of the coffee maker placement at an account is a decision that is made with the contact person at that account. This decision is usually made in advance by your company's representative. It is important to remember that the coffee maker gets placed in an easily accessible, and highly visible area for the majority of its customers, and that it is easily accessible for any service that may be required. It is also important to consider height. The person who will be filling the ingredient dispensers must be able to easily reach the top of the coffee maker. There must be adequate room to lift the lid on top of the coffee maker, and to open the front door. The tables below outline the clearances needed for the area in which the coffee maker is installed.

Installation Dimensions	Suprema
Height:	41 inches (104.5 cm)
Depth:	28 inches (71.5 cm)
Width:	22.5 inches (57 cm)
Height - with Hopper Extension	45 inches (114.5 cm)
Width - with cup holder	26.5 inches (67.5 cm)
Width - with A.P.P. unit ***or*** bill acceptor unit ***or*** condiment stand.	32.5 inches (82.5 cm)

WATER FILTER

We recommend the use of a high quality water filter (such as Everpure Filters). Filters will eliminate most odors present in water, and will reduce the amount of particles entering the water tank. The following are basic instructions for installing a cartridge type filter using a head bracket (Everpure type filter).

1. **Assemble the retaining bracket to the filter head.**
2. **Insert the cartridge into the filter head and turn the cartridge clockwise.**
3. **Apply Teflon tape to the threaded portion of two 3/8" x 1/4" fittings and screw each into the filter head.**
4. **Mount the water filter at an easily accessible place for servicing, such as:**
   (a) Under the sink against the back or side wall,
   (b) On the back of a utility cabinet,
   (c) On the back of the coffee maker,
   (d) Any location generally within 20 feet of the machine.

CONNECTING TO A WATER SUPPLY

WARNING: Be certain of the type of water supply line you tap into. **DO NOT** connect the coffee maker to a fire sprinkler water supply as this is a very high pressure line. Connect to a drinking water supply only.

PLUMBING - Self-Piercing Saddle Valve

The self-piercing saddle valve is used for tapping into larger or odd-sized pipes which you may encounter, usually in older buildings.

1. **Position the valve over the pipe it is to tap into.**
   a) With the valve gasket in place around the needle, tighten the screws or bolts that clamp the valve to the pipe from both sides. **Be extra careful not to crush the pipe.**

2. **Tap into the pipe.**
   a) Turn the valve knob clockwise until it pierces a hole in the pipe. The water will not start flowing at this point.

3. **Attach your tubing to the outlet of the saddle valve.**
   a) Use the insert and the ferrule provided with the valve.
   b) Tighten the nut.

CAUTION: There are potential problems when using a self-piercing saddle valve. It is important when clamping the valve to the pipe that it remains straight. When you tighten the nut on the outlet tubing, make sure the valve remains stationary on the pipe. Movement of the valve will cause the needle to move, creating an oversized hole in the pipe, resulting in a leak.

PLUMBING - "T" and Reducing "T" Fittings

➢ ***Note:***
A "T" fitting is used when tapping pipes commonly used at the sink stand-pipe or drinking fountain.

1. **Remove a 1" (2.5 cm) section of pipe being tapped, with a tubing cutter.**

2. **Insert a "T" in the space created.**
   a) Use a 1/4 x 1/4 x 3/8, or a 3/8 x 3/8 x 3/8, or a 1/2 x 1/2 x 3/8, depending on the size of the piece of pipe that has been cut out. If using 1/4 tubing, the last measurement of the above three descriptions should be 1/4.

3. **Secure the fittings.**
   a) Using "T"'s and reducing "T"'s, insert the compression ferrules.
   b) Carefully tighten the nuts.

4. **Attach and secure the tubing.**
   a) Insert the tubing into the "T" with a compression ferrule.
   b) Tighten the compression nut.

RUNNING COPPER TUBING

If the position of the coffee maker is near the water source, by far the simplest route for the tubing is along the baseboard or straight down the wall. In both cases, the tubing should be secured to the wall with self-adhesive or nail-on tubing clips.

In other cases, it may be practical to run tubing over the top of suspended ceilings. This helps to run the water longer distances, up to 200 feet, with no tube showing. ***Running tubing inside walls should be completely avoided.*** It is difficult and time consuming, and does not appreciably improve the appearance of the installation. Please note, however, that neatness and the appearance of the installation should be a top priority.

When it is necessary to make a hole in the wallboard, make it with a Phillips screwdriver, rather than an electric drill. This will prevent hitting electrical wiring, telephone wiring, or a water supply. If you must use a drill, be certain of what is on the other side of the wall, then proceed.

1. **Connect the tubing to the inlet of the water filter.**
   a) Most filters have an arrow to indicate the direction of the water flow.

2. **Connect a section of tubing to the water filter outlet, and run it to the inlet of the machine.**
   a) Insert the tubing into the outlet side of the water filter and secure.
   b) Coil an extra 18 inches (45 centimeters) of tubing behind the coffee maker to allow for repositioning of the coffee maker.
   c) Do not connect to the machine at this point.

3. **Turn off the valve on the water filter head.**
   a) Some water filters may not be equipped with an inline valve. If this is the case, it is recommended that one be installed prior to continuing.

4. **Open the valve at the main water source.**

5. **Bleed the water lines.**
   a) Turn on the valve at the water filter and catch the first gallon (4 liters) of water. This will remove any stagnant water and air from the line.

6. **Turn off the valve on the water filter head.**

7. **Connect and secure the tubing to the inlet fitting of the machine.**
   a) Apply a fitting to the inlet at the rear of the coffee maker, using Teflon tape. Keep in mind that Teflon tape should be applied in a clockwise direction.

8. **Test for any leaks.**
   a) Plug in the machine, and switch the power "**ON**".
   b) Listen for the sound of the tank filling.
   c) Check all fittings for any leaks, and tighten where necessary.

FINISHING TOUCHES

1. **Position the carafe tray/grill and the cup tray/grill on the coffee maker.**

2. **Follow this checklist before leaving the account.**

✓	**Fill the ingredient dispensers with coffee. Reset the coffee indicator messages (if used).**
✓	**Fill the chocolate container with syrup. Reset the indicator message (if used).**
✓	**Install a waste bag into the waste container.**
✓	**Test the water temperature with a thermometer.**
✓	**Test brew a cup of coffee. Use coins to test a coin changer, if one is being used.**
✓	**Familiarize the caretaker with the coffee maker. This includes cleaning, how to use the keys, whom to call in case of a problem, etc.**
✓	**Check for leaks one final time. Tighten fittings where necessary.**

If the coffee maker is equipped with the hot chocolate option, remember to leave an extra hot chocolate container with the caretaker, who will regularly have to replace and clean these containers.

If any other options are being used with the equipment, familiarize the caretaker with their operation and any maintenance that may be required.

PROGRAMMING THE EQUIPMENT

The first section of the "**SET-UP**" mode displays all the counters. These counters can be reset while in this mode. The following table lists all the counters in the order in which they appear at the beginning of the "**SET-UP**" mode;

> ➢ ***Note:***
> ***While in the "SET-UP" mode, pressing the "SET-UP" button once again will exit this mode and save all changes made to the programming.***

CASHBOX TOTAL
VEND TOTAL
(RESETTABLE) VEND TOTAL RESET
COIN DISPENSE --- *appears only in "COIN" mode*
TOTAL / SELECTION
FREE VEND TOTAL

VIEWING AND RESETTING COUNTERS

1. **Enter the "SET-UP" mode.**

> ➢ ***Note:***
> ***The "VEND TOTAL" counter can only be reset by performing a "TOTAL COUNTER RESET".*** Page 15.

a) Press the "**SET-UP**" mode button on the interior door panel. The display will now read,

CASH BOX TOTAL= $*XXXX.XX*

b) To reset the "**CASHBOX TOTAL**", press the "**START**" button. To scroll to the next counter, press the "**UP**" button on the hidden menu scroll buttons.

c) The next counter is the "**VEND TOTAL**" counter. This counter can only be viewed and it is not possible to reset it at this point. To scroll to the next counter, press the "**UP**" button on the hidden menu scroll buttons.

d) The next counter to be displayed is the "**VEND TOTAL RESET**" counter (resettable). Press the "**START**" button to reset, if needed.

e) The next counter to be displayed is the "**TOTAL/SELECTION**" counter. Press the "**START**" button to reset the counters.

Please note that a confirmation message will appear after "**START**" is pressed. To reset the counters, press "**START**" again. To cancel the reset, press the "**COFFEE**" button.

> 👍 ***Tip:***
> *The "**VEND TOTAL**" counter can also be viewed by pressing the "**COFFEE**", "**50/50**" and "**DECAF**" buttons simultaneously. It will appear immediately after the product status is displayed.*

f) The next counter to be displayed is the "**FREE VEND TOTAL**" counter. Press the "**START**" button to reset, if needed.

COIN DISPENSE

The "**COIN DISPENSE**" menu will only appear and function if the coffee maker is in "**COIN**" mode. If the coffee maker is in "**FREE**" mode, this feature will be completely disabled and the message will not appear on the display.

1. **To dispense coins, scroll in the "SET-UP" until the display reads,**

COIN DISPENSE
5¢ 10¢ 25¢

a) To dispense nickels, press the "**COFFEE**" button.

b) To dispense dimes, press the "**50/50**" button.

c) To dispense quarters, press the "**DECAF**" button.

Use this chart as a quick reference.

5¢	Press "**COFFEE**"
10¢	Press "**50/50**"
25¢	Press "**DECAF**"

Tip:
Keep the corresponding button pressed while dispensing and the coin changer will dispense three coins per second to help empty the coin tubes more quickly.

TOTAL PER SELECTION COUNTER

When scrolling through the counters, you will see a counter that is called the "**TOTAL/SELECTION**" counter. This counter will display the number of cups brewed for the selection that corresponds to the LED's that are illuminated on the selection panel. To get a counter reading, press the buttons that would correspond to the counter you need to access. At this point, the LED's for your selection will be illuminated.

Note:
When accessed, this counter will default to illuminating the "COFFEE" button, all cup sizes and all strengths to give a vend reading for the total cups of coffee.

EXAMPLE:

*If you need to know how many MEDIUM cups of DECAF, STRONG strength have been brewed, press the "**DECAF**", "**STRONG**", and "**MEDIUM CUP**" buttons. The LED's will illuminate and the display will show how many cups of this particular selection were brewed. To check any other selection, press the corresponding buttons on the selection panel.*

As previously stated, the counter reading on the display corresponds directly to the LED's illuminated on the selection panel. This allows for many counter combinations, again depending on what is pressed and which LED's are illuminated on the selection panel. To switch an LED off again, press the corresponding button a second time.

Note:
Pressing the "START" button while in this mode will reset all the cup and product counters to zero. It is not possible to individually reset any of these counters.

TOTAL COUNTER RESET

This software contains a special access code that enables the service person to reset all the counters to zero, including the "**VEND TOTAL**" counter. This operation should be performed before a unit is re-installed in the field.

1. **To perform a "TOTAL COUNTER RESET",**

   a) Switch the power to the coffee maker "**OFF**" (switch is at the rear of the unit).

   b) Press the "**SET-UP**" mode button on the inside door panel and keep it depressed.

   c) With "**SET-UP**" mode button pressed, switch power to coffee maker "**ON**".

   d) The following message will now appear on the display,

ENTER ACCESS CODE:

   e) Enter the "**TOTAL COUNTER RESET**" access code (described below).

"TOTAL COUNTER RESET" ACCESS CODE

The following is the factory preset "**TOTAL COUNTER RESET**" access code - press the following in the sequence outlined below;

1	COFFEE
2	MILD STRENGTH
3	LARGE CUP
4	MEDIUM CUP
5	SMALL CUP

Once the access code has been entered, a counter will appear on the top left of the display, and will quickly increment from 0 to 255. Once this is complete, press "**START**" for the brewer to cycle once to re-establish its home position.

➢ ***Note:***
When the reset is complete, the unit will automatically exit to the "standby" mode, and the internal light will remain "ON" temporarily.

SET-UP MODE & ACCESS CODE

After scrolling past all of the counters, an access code is required to get into the "**SET-UP**" section of the software. This section allows changes to be made to the computer programming. The procedures are outlined below.

> ***Tip:***
> *To bypass the counters and go directly to the access code menu, press the hidden "**DOWN**" menu scroll button, after pressing the "**SET-UP**" button.*

1. **Enter the factory pre-set access code.**
   a) Factory pre-set access code - press the following in the sequence outlined below;

1	COFFEE
2	50/50
3	DECAF
4	HOT WATER

   b) The message on the display will now read,

PRODUCT ON/OFF PRESS <START>

2. **The "SET-UP" mode has now been accessed, and changes can be made.**
   a) The following is the sequence of the settings that appear when you scroll through the "**SET-UP**" mode. Please note that there are some differences between the Regular software version and the APP software version.

Suprema Model Type	*REG*	*APP*
PRODUCT ON/OFF	●	
SET PRODUCT	●	●
SET WATER	●	●
SET PRICE	●	●
ENABLE SWITCHES	●	●
SET DEFAULT	●	●
SET TOP PAUSE	●	●
SET BOTTOM PAUSE	●	●
MAXIMUM CUPS FOR CARAFE	●	●
FREQUENCY OF MESSAGES	●	
SERVICE COUNTER	●	
BOTTOM PAUSE DELAY	●	●
MESSAGES ON / OFF	●	●
FREE VEND KEY SWITCH	●	●
SET GROUNDS CONT.	●	
CHOCO PUMP CYCLES	●	●
DOUBLE-CUP SET-UP	●	●
SET TEMPERATURE	●	●
CUSTOM MESSAGES	●	
LANGUAGE	●	
SET WATER LEVEL	●	●
SET POWDER MIX		●
SET POWDER BEV.		●
WATER MAX. BREWER	●	
LOCK COUNTERS	●	
FORCE VEND	●	●

● ***Available Feature***

Reminder: The "**INCREASE**" (+) and "**DECREASE**" (-) buttons are located to the right of the "**START**" button, and the "**MENU SCROLL UP**" and "**MENU SCROLL DOWN**" buttons are located to the left of the "**START**" button. *See page 4 for illustration*.

PRODUCT ON/OFF

This feature allows you to run a complete coffee or hot chocolate cycle (including the two pauses) without any product being dispensed (no coffee or chocolate). This will allow you to manually test brew different coffee blends for the customer to taste. The customer can then decide which blend he prefers. To use it as a test brew cycle, simply weigh and manually pour the coffee grounds into the brew chamber, and press the "**START**" button. This procedure can be repeated if you need to test brew another blend.

1. **To switch the product OFF, press the "UP" button on the hidden menu scroll buttons and scroll until the following message appears,**

PRODUCT ON/OFF PRESS <START>

a) Press the "**START**" button to enter set mode.

b) Switch the product "**OFF**" or "**ON**" by using the hidden setting adjustment buttons. Press the "**UP**" button to toggle it "**OFF**" or "**ON**".

c) To exit the "**PRODUCT** on-off" mode and proceed to the next setting, press the hidden "**UP**" or "**DOWN**" scroll buttons.

> ➢ ***Note:***
> ***If the product is switched "OFF", it remains off until you enter the "SET-UP" mode to switch it "ON" again. Please make sure it is switched "ON" before you leave the account.***

SETTING PRODUCTS

1. **To adjust product settings, press the "UP" button on the hidden menu scroll buttons and scroll until the following message appears,**

SET PRODUCT PRESS <START>

a) Press the "**START**" button to enter the set mode.

b) At this point, you can now select the product settings for any cup size, product and product strength by pressing the appropriate buttons on the selection panel. The time setting displayed will correspond to the LED's that are illuminated.

c) Using the hidden setting adjustment buttons, increase or decrease the timing for the product.

d) To exit the "**SET PRODUCT**" mode and proceed to the next setting, press the hidden "**UP**" or "**DOWN**" scroll buttons.

> ➢ ***Note:***
> ***The minimum allowable setting for all products is 0.5 seconds, and the maximum is 8.0 seconds.***

> ***Tip:***
> *While in the "**SET PRODUCT**" or "**SET WATER**" menus, you can test the product and water quantities by pressing the "**START**" button. The product or water tested will correspond to the LED's illuminated on the front selection panel. Make certain you have something ready to catch the coffee grounds or water that will be dispensed.*

SETTING WATER

➢ ***Note:***
The minimum allowable setting for water is 0.5 seconds, and the maximum is 8.0 seconds for coffee water and 20.0 seconds for "HOT WATER".

➢ ***Note:***
When adjusting the water level for the "CAFE MOCHA", only the chocolate valve timing is adjusted. The coffee valve timing remains unchanged as it is calculated by the microprocessor.

1. **To adjust water settings, press the "UP" button on the hidden menu scroll buttons and scroll until the following message appears,**

SET WATER PRESS <START>

   a) Press the "**START**" button to enter the set mode.

   b) At this point, you can now select the water settings for any cup size and product by pressing the appropriate buttons on the selection panel. The time setting displayed will correspond to the cup size and product LED's that are illuminated.

   c) Using the hidden setting adjustment buttons, increase or decrease the timing for the water.

   d) To exit the "**SET WATER**" mode and proceed to the next setting, press the "**UP**" or "**DOWN**" scroll buttons.

WARNING: Do not press the "START" button to exit this mode as it will do a test cycle and dispense water. This does not apply to "**CAFE MOCHA**", as there is no test cycle for this product.

SETTING PRICES

To operate this equipment in "**COIN**" mode, an optional Coinco 9300 series coin changer must be installed. This changer can be purchased from your local Coinco retailer. *Installation instructions for the coin changer and pricing decals can be found on page 58 of this manual.*

1. **To adjust price settings, press the "UP" button on the hidden menu scroll buttons and scroll until the following message appears,**

SET PRICE PRESS <START>

➢ ***Note:***
The maximum allowable price setting is $12.75. This is the maximum setting per cup, as well as for a complete carafe.

   a) Press the "**START**" button to enter the set mode.

   b) At this point, you can now select the price setting for any cup size and product by pressing the appropriate buttons on the selection panel. The price setting displayed will correspond to the LED's that are illuminated.

   c) Using the hidden setting adjustment buttons, increase or decrease the price.

   d) To exit the "**SET PRICE**" mode and proceed to the next setting, press the "**UP**" or "**DOWN**" scroll buttons.

ENABLING SWITCHES

1. **To enable the switches and functions that are required, press the "UP" button on the hidden menu scroll buttons and scroll until the following message appears,**

ENABLE SWITCH PRESS <START>

a) Press the "**START**" button to enter set mode.

b) On initial set-up, all the LED's will be illuminated at this point, meaning that everything is switched "**ON**". To disable certain features, press the button that corresponds to that feature and the LED will switch off. That feature has now been disabled.

c) Repeat this procedure for any other feature that you require to cancel.

d) Press the "**START**" button to save any changes that were made.

e) To exit the "**ENABLE SWITCHES**" mode and proceed to the next setting, press the hidden "**UP**" or "**DOWN**" scroll buttons.

> ➢ ***Note:***
> ***Selections with illuminated LED's will be active, and those without illuminated LED's will be disabled. Check the settings before exiting and once verified, press the "START" button to save them.***

When a selection is disabled and the customer presses the corresponding button for that selection, the following message appears on the display,

SELECTION NOT AVAILABLE

CANCELING INDIVIDUAL SELECTIONS

It is possible to cancel any individual setting on the selection panel (providing this setting can be priced). For example, if all three cup sizes are required for coffee, but the customer requires only a large cup for hot chocolate, it is possible to cancel only the small and medium cups for hot chocolate, without canceling the large cup.

1. **To cancel individual selections, press the "UP" button on the hidden menu scroll buttons and scroll to the "SET PRICE" menu.**

a) Press the "**START**" button to enter the set mode.

b) At this point, you can now select the price setting for the cup size and product you want to cancel by pressing the appropriate buttons on the selection panel. The price setting displayed will correspond to the LED's that are illuminated.

c) Decrease the price to zero by pressing the hidden "**DOWN**" button.

d) Once the price is at zero, press the hidden "**DOWN**" button once more. The price will disappear, and a "**DISABLED**" message will appear on the second row of the display. This indicates that this particular product is now canceled.

e) Repeat this procedure for another product, or press the "**UP**" or "**DOWN**" scroll buttons to access another menu.

> ➢ ***Note:***
> ***Only selections that can be priced may be canceled.***
>
> ***Once canceled, a "SELECTION NOT AVAILABLE" message appears on the display when the product is selected by the customer.***

SETTING THE DEFAULT

1. **To program the default settings, press the "UP" button on the hidden menu scroll buttons and scroll until the following message appears,**

SET DEFAULT PRESS <START>

a) Press the "**START**" button to enter the set mode.

b) The LED's that correspond to the current default setting will now be illuminated.

c) To change the default, press the buttons on the selection panel for the new default settings. The LED's that are illuminated will now become the new default settings.

d) In no default is set, the LED's on the selection panel will light and scroll until the user selects one. This applies for the products, strengths, and cup sizes, therefore three selections will be required by the user.

e) To exit the "**SET DEFAULT**" mode and proceed to the next setting, press the "**UP**" or "**DOWN**" scroll buttons.

SETTING TOP PAUSE

The "**TOP PAUSE**" occurs when the brewer is at top dead center, and is before the regular pause. When the piston reaches top dead center in the cylinder, the brewer will pause for the amount of time set in this menu, to allow the coffee and water to steep (mix together). The higher the "**TOP PAUSE**" is set to, the stronger the cup of coffee that is brewed by the equipment.

1. **To set the "TOP PAUSE" setting, press the "UP" button on the hidden menu scroll buttons and scroll until the following message appears,**

SET TOP PAUSE PRESS <START>

a) Press the "**START**" button to enter the set mode.

b) At this point, select the cup size by pressing the appropriate buttons on the selection panel. The "**TOP PAUSE**" setting displayed will **correspond to the cup size** that is illuminated.

c) Using the hidden setting adjustment buttons, increase or decrease the timing for the "**TOP PAUSE**".

d) To exit the "**SET TOP PAUSE**" mode and proceed to the next setting, press the "**UP**" or "**DOWN**" scroll buttons.

> ➢ ***Note:***
> ***The minimum setting for the "TOP PAUSE" is 2.0 seconds.***

SETTING BOTTOM PAUSE

The bottom pause stops the piston before the pour spout area, creating a vacuum and allowing time for the liquid coffee to be pulled through the coffee grounds and the filter. If this setting is too low, it may create brewer flooding problems as there is not enough time to draw all the liquid from the brew chamber into the brewer cylinder.

1. **To adjust the "BOTTOM PAUSE", press the "UP" button on the hidden menu scroll buttons and scroll until the following message appears,**

SET BOTTOM PAUSE PRESS <START>

a) Press the "**START**" button to enter the set mode.

b) At this point, you can now select the cup size and product by pressing the appropriate buttons on the selection panel. The "**BOTTOM PAUSE**" setting displayed will correspond to the LED's that are illuminated.

> ***Tip:***
> *It is possible to adjust a separate "**BOTTOM PAUSE**" for both coffee and decaf, if needed.*

c) Using the hidden setting adjustment buttons, increase or decrease the timing for the "**BOTTOM PAUSE**".

d) To exit the "**SET BOTTOM PAUSE**" mode and proceed to the next setting, press the "**UP**" or "**DOWN**" scroll buttons.

SETTING THE MAXIMUM NUMBER OF CUPS PER CARAFE

This feature allows you to set the maximum number of cups to be brewed in a carafe cycle (between 3 to 10). When the carafe feature is selected, it will start at the maximum number of cups set in this menu, and decrement by one cup every time the carafe button is pressed.

> ***Note:***
> ***By default, the carafe feature is disabled. If it is enabled, the maximum number of cups that can be programmed for a carafe is 10.***

1. To set the maximum number of cups for a carafe, press the "**UP**" button on the hidden menu scroll buttons and scroll until the following message appears,

MAX CUP/CARAFE PRESS <START>

a) Press the "**START**" button to enter the set mode.

b) Using the hidden setting adjustment buttons, increase or decrease the maximum number of cups that need to be set for the carafe.

> ***Note:***
> ***If the carafe feature is enabled, it overrides the double-cup feature (only if double-cup is set on the large cup).***

c) To completely disable the carafe feature, change the setting to "**OFF**".

d) To exit the "**MAX CUPS/CARAFE**" mode and proceed to the next setting, press the "**UP**" or "**DOWN**" scroll buttons.

When the carafe is selected, a confirmation message will appear on the display. This confirmation is there to avoid selecting the carafe by accident. When this message appears, you will have to press the carafe button once more, and the cycle will commence. To cancel a carafe cycle that is already in progress, press the "**START**" button and it will exit after the cup that is already in progress has been brewed.

SETTING THE FREQUENCY OF MESSAGES

1. **To program the frequency of messages, press the "UP" button on the hidden menu scroll buttons and scroll until the following message appears,**

   a) Press the "**START**" button to enter the set mode.

   b) Using the hidden setting adjustment buttons, increase or decrease the timing for the frequency at which the messages are to appear.

   c) To exit the "**FREQUENCY**" mode and proceed to the next setting, press the "**UP**" or "**DOWN**" scroll buttons.

SERVICE COUNTER

This is a counter that, when reset, starts at 6000 and decrements by one every time a product is dispensed. Once it reaches zero, the following message appears,

This message acts as a reminder that regular maintenance is due on the equipment. Please note that this feature can be canceled. For more information, please check the "**CANCELING MESSAGES**" section of this manual.

1. **To reset the service counter, press the "UP" button on the hidden menu scroll buttons and scroll until the following message appears,**

   a) Press the "**START**" button to enter the set mode.

   b) Press the "**START**" button once more to reset the counter. The counter will now display 6000.

   c) To exit the "**SERVICE COUNTER**" mode and proceed to the next setting, press the "**UP**" or "**DOWN**" scroll buttons.

SETTING BOTTOM PAUSE DELAY

This feature allows a delay in the position of the bottom pause to obtain maximum vacuum and capacity in the brewer. For example, if this setting is at 0.5 seconds, the bottom pause will occur 0.5 seconds after the switch reads the pause position on the cam. The piston will stop lower in the cylinder, creating more vacuum and increasing the quantity of liquid that can be pulled into the cylinder.

1. **To set the "DELAY PAUSE", press the "UP" button on the hidden menu scroll buttons and scroll until the following message appears,**

DELAY PAUSE PRESS <START>

a) Press the "**START**" button to enter the set mode.

b) Using the hidden setting adjustment buttons, increase or decrease the timing for the bottom pause delay.

c) To exit the "**SET DELAY PAUSE**" mode and proceed to the next setting, press the "**UP**" or "**DOWN**" scroll buttons.

CANCELING MESSAGES (MESSAGES ON, OFF or "ACTIVE")

The following is a list of all the cancelable messages in this version of software. Most of these messages can also be programmed to be "active", meaning they will disable the unit until the message has been cleared. Use this chart as a quick reference.

CANCELABLE MESSAGES
Refill Large Hopper
Refill Small Hopper
Refill Chocolate
Empty Grounds
Call Key Operator
Service Message
Custom Messages
Temp. Too Low

➢ ***Note:***
The upper half of the display indicates which message is to be canceled, and the lower half of the display indicates the status of the message (ON-PASSIVE, ON-ACTIVE, or OFF). All new units are factory set with every message set to "ON-PASSIVE".

➢ ***Note:***
Each of the messages in the table can be individually set to "ON-ACTIVE". Please be aware that if a message is set to "ON-ACTIVE", the function corresponding to that message will be disabled when the message appears. Make sure to inform the caretaker of the proper procedure required to clear the messages.

1. **To cancel one of the passive messages, or to make the message "*active*", press the "UP" button on the hidden menu scroll buttons until the following message appears,**

MESSAGES ON/OFF PRESS <START>

a) Press the "**START**" button to enter the set mode.

b) Scroll through the messages by pressing the "**START**" button.

c) To cancel a message or to make it "**ACTIVE**", once it is displayed on the LCD press either one of the two hidden setting adjustment buttons to switch it to "**OFF**" or " **ON -ACTIVE**".

d) Press "**START**" to save the settings.

e) To enable a message again, repeat the above procedure and switch the message to "**ON**" (either passive or active).

f) To exit, press one of the hidden scroll buttons.

FREE VEND KEY SWITCH SET-UP

The free vend key switch allows the operator to perform one of two functions.

❶ **MOMENTARY** - this allows you to brew one free cup of coffee or chocolate when the unit is in coin mode by turning the switch.

❷ **TOGGLE FREE/COIN** - this allows you to toggle the unit from free to coin mode (or vice versa) without using the buttons on the inside door panel, simply by turning the key and then removing it.

The type of function required for the free vend key switch can be programmed in the "**SET-UP**" mode. Please note that this feature can be disabled if not required.

1. **To set the free vend key switch function, press the "UP" button on the hidden menu scroll buttons until the following message appears,**

FREE VEND KEY PRESS <START>

   a) Press the "**START**" button to enter the set mode.

   b) Scroll to the required function type by pressing the hidden setting adjustment buttons.

   c) To save, press either one of the two hidden menu scroll buttons once the desired function is displayed on the LCD.

SETTING THE "EMPTY GROUNDS CONTAINER" MESSAGE

This feature enables a message to appear as a reminder that the grounds container must be emptied. It can be programmed to appear anywhere between 25 cups to 250 cups after it has been reset, or it can be canceled altogether.

1. **To set the frequency of the grounds container message, press the "UP" button on the hidden menu scroll buttons until the following message appears,**

SET GROUNDS CONT. PRESS <START>

   a) Press the "**START**" button to enter the "**SET-UP**" mode.

   b) Using the hidden setting adjustment buttons, increase or decrease the number of cups. The cup count will increase in increments of 25.

   c) To save, press either one of the two hidden menu scroll buttons once the required number of cups is displayed on the LCD.

SETTING NUMBER OF CHOCOLATE PUMP CYCLES

This feature will allow you to program the number of chocolate pump cycles for any cup size. The unit is preset to the following from the factory:

CUP SIZE	HOT CHOCOLATE	CAFE MOCHA
Small - 6 oz.	2 cycles	1 cycle
Medium - 8 oz.	2 cycles	1 cycle
Large - 10 oz.	3 cycles	2 cycles

1. **To set the number of chocolate pump cycles for each cup, press the "UP" button on the hidden menu scroll buttons until the following message appears,**

   CHOCO PUMP
   PRESS <START>

   a) Press the "**START**" button to enter the set mode.

   b) Select the cup size and product to be programmed on the front selection panel.

   c) Using the hidden setting adjustment buttons, increase or decrease the number of pump cycles. Maximum is 8 for hot chocolate and 3 for café mocha.

   d) To set, press either one of the two hidden menu scroll buttons.

> ➢ ***Note:***
> ***If the number of "CAFE MOCHA" pump cycles has been changed for a particular cup size, it is necessary to enter the "SET-UP" mode to adjust the product and water levels for that cup size.***

SETTING THE DOUBLE-CUP

Any one of the three cup sizes can be programmed to dispense a double-cup (two consecutive cups) of coffee or cafe mocha using this feature. For example, if you would like to brew a 20-oz. cup of coffee, it is possible to set a 10-oz. large cup to brew a double-cup.

1. **To program a cup to be a double-cup, press the "UP" button on the hidden menu scroll buttons until the following message appears,**

   DOUBLE-CUP
   PRESS <START>

   a) Press the "**START**" button to enter the set mode.

   b) On the front selection panel, press the cup size that needs to be programmed to become a double-cup. The LED that corresponds to that cup size will illuminate as an indication that it has been programmed as a double-cup.

   c) To program back to single cup, repeat the above procedure. Pressing the cup size will switch the LED off, which indicates the double-cup feature is disabled for that cup size.

> ➢ ***Note:***
> ***Once a cup size is programmed to brew a double-cup, it will no longer brew a single cup.***

> ➢ ***Note:***
> ***The double-cup feature is not available for hot chocolate. For hot chocolate, increase the number of chocolate pump cycles.***

Please note that if the carafe feature is enabled, it overrides the double-cup feature if the double-cup is set for the large cup (this does not apply is double-cup is set on the small or medium cup).

SETTING THE TEMPERATURE

> ➢ ***Note:***
> ***This feature only functions on equipment using an electronic temperature probe.***

> ***Tip:***
> *To toggle between Fahrenheit and Celsius, press the "**LARGE CUP**" button while in the "**SET TEMPERATURE**" menu.*

1. **To set the temperature of the water in the tank, scroll the menu that reads,**

SET TEMPERATURE PRESS <START>

   a) Press the "**START**" button. The bottom row of the display will now indicate the currently programmed temperature setting.

   b) Using the hidden setting adjustment buttons, increase or decrease the temperature for the water tank.

   c) When programmed, this will be the maximum temperature to which the water will heat. Once the water has reached this temperature, the heater will switch off.

SETTING THE "WARMING UP" WARNING MESSAGE

a) Press the "**START**" button to get back to the main menu, and scroll to the "**MESSAGES** on/off" menu.

b) Press "**START**" to enter this menu, and scroll to the "**TEMP IS TOO LOW**" message by pressing the "**START**" button.

c) This message can be set to "**ON –ACTIVE"**, "**ON-PASSIVE**" or "**OFF**". If the message is set to "**ON-ACTIVE**", the "**WARMING UP**" message will appear after the temperature in the tank drops about 20° F, and the unit will no longer function until the temperature gets back to its proper operating range. Set to "**ON-PASSIVE**", the message will appear on the display, but the unit will continue to function normally.

PROGRAMMING A CUSTOM MESSAGE

> ➢ ***Note:***
> ***When entering a custom message, note that the display has two lines of message space with 16 characters on the first line and 15 on the second. Verify that your message fits in the available space.***

> ***Tip:***
> *Two shortcut keys can be used on the selection panel to speed up programming the custom message. If the "**COFFEE**" button is pressed, the underlined character will be erased. If any one of the cup size buttons is pressed, the upper case letter "**A**" will appear over the cursor.*

This software allows you to program a custom message to appear on the display. When this function is enabled and the text has been programmed, the message on the display will then toggle back and forth from the "*standby*" message to your customized message. Upper and lower case letters, numbers and an assortment of symbols are provided as text for setting your custom message.

1. **To set a custom message to appear on the display, press the "UP" button on the hidden menu scroll buttons until the following message appears,**

CUSTOM MESSAGES PRESS <START>

   a) Press the "**START**" button to enter the set mode.

   b) On the display, you will notice a line underneath the first character. To change this character, use the hidden setting adjustment buttons to scroll to the next or previous characters. Keep scrolling until the character you require is displayed in this location.

   c) To proceed to the next character space, press the "**START**" button and the line will move underneath the next character.

   d) Repeat these procedures until your custom message is complete.

   e) To save, press either one of the two hidden menu scroll buttons.

Please note that the "**CUSTOM MESSAGE**" feature must be enabled in the "**MESSAGES ON/OFF**" menu for it to function.

SETTING LANGUAGE

The messages that appear on the LCD can be displayed in either English or French. Please note that the coffee maker will be shipped from the factory with the messages set to English.

1. **To set the language, press the "UP" button on the hidden menu scroll buttons and scroll until the following message appears,**

> ➢ ***Note:***
> ***If "ENGLISH + FRENCH" is selected, the messages on the display will continuously toggle from English to French approximately every three seconds.***

SET LANGUAGE
PRESS <START>

a) Press the "**START**" button to enter the set mode.

b) Using the hidden setting adjustment buttons, select "**ENGLISH**", or "**FRENCH**", or "**ENGLISH + FRENCH**".

c) To save, press either one of the two hidden menu scroll buttons.

SETTING THE WATER LEVEL PROBE

When scrolling through the "**SET-UP**" mode, you will notice a setting in the menu that reads,

SET WATER LEVEL
PRESS <START>

1. **Press "START" to access this menu.**

a) Using the hidden adjustment buttons, change the setting from "**MECHANICAL SWITCH**" to "**ELECTRONIC PROBE**".

b) Exit the "**SET-UP**" mode.

WARNING: Do not access this menu if the machine is not equipped with the electronic water level probes.

SETTING THE POST-MIX

The post-mix feature allows the unit to brew a larger cup size than the capacity of the brewer permits. If a 12-oz cup is required, for example, the brewer can easily dispense 9 oz, but this will not be enough to fill this larger cup. With this feature enabled and properly set, the unit will brew 9 oz from the brewer as it normally does, and the remaining 2-3 oz of liquid required to fill this cup will be dispensed by the hot water valve. Both the brewed coffee and hot water will be mixed together as they are dispensed into the cup, filling the larger cup in one single cycle.

1. **To enable and set the post-mix feature, it will be necessary to scroll between two of the menus in the set-up mode, and make several adjustments to each.**

   a) Set the coffee water timing (in the "**SET WATER**" menu) so that the brewer dispenses a large cup of coffee.

   b) Once done, remember the coffee water timing value because it will be needed to program the post-mix. For example, the coffee water timing for a large cup on this unit is 3.5 seconds to get 250 ml (8.5 oz.).

   c) Scroll to the "**WATER MAX. BREWER**" menu, and press "**START**".

   d) Using the example above, we know that the maximum coffee water timing on this unit is 3.5 seconds. This value has to now be entered as the maximum in this menu.

   This setting will now limit the water being dispensed into the brewer (from the coffee valve) to a maximum of 3.5 seconds.

   e) It will now be necessary to return to the "**SET WATER**" menu. Using the example above, the large cup coffee water timing was set to 3.5 seconds, and the maximum allowable coffee water timing was also set to 3.5 seconds.

   f) At this point, any increase to the large cup water timing will go above the maximum allowable coffee water timing that was set above, and that extra water will be dispensed by the hot water valve. For example, if the large cup coffee water timing is now raised to 4.5 seconds, 3.5 seconds of that will be dispensed by the coffee valve, and the extra 1.0 second will get dispensed by the hot water valve.

➢ ***Note:***
The hot water post-mix will slightly dilute the coffee being dispensed by the brewer. It may also be necessary to increase the product being dispensed into the brewer to compensate for this (only for the cup being post-mixed).

When a cup is now brewed, the brewer cycle will appear to function normally until the end of the cycle. At that point, coffee from the brewer and hot water from the hot water valve will be dispensed into the cup at the same time. The hot water will mix with the coffee, resulting in a larger cup of coffee than the brewer alone is capable of making.

LOCKING THE COUNTERS

This feature will allow you to lock the counters, preventing the caretaker from resetting them. With this lock enabled, it will not be possible to reset any of the counters when in the "**COUNTER**" mode. If the counters need to be reset, it will be necessary to go to this menu to unlock them first. This obviously requires the "**SET-UP**" mode access code, limiting the number of people that can go into the programming to unlock the counters. Once they are unlocked, they can be reset using the normal counter resetting procedures outlined in this manual. Please note that this feature is disabled when the equipment is shipped from the factory.

1. **To lock all the counters, press the "UP" button on the hidden menu scroll buttons and scroll until the following message appears,**

LOCK COUNTERS PRESS <START>

   a) Press the "**START**" button to enter the set mode.

   b) Using the hidden setting adjustment buttons, select "**ON**" to lock the counters, or "**OFF**" to unlock them.

   c) To save, press either one of the two hidden menu scroll buttons once the desired function is displayed on the LCD.

SETTING THE FORCE VEND FEATURE

There are three different settings that can be programmed for this particular feature. This feature can be set in the "**SET-UP**" mode.

1. **To set the "FORCE VEND" feature, press the "UP" button on the hidden menu scroll buttons and scroll until the following message appears,**

FORCE VEND PRESS <START>

> ➢ ***Note:***
> ***This feature is intended mainly for the Canadian market and prevents people from using the Suprema as a 'change maker' (usually done by inserting a $1 or $2 coin, then pressing the coin return button to get change in quarters).***

   a) Press the "**START**" button to enter the set mode.

   b) Using the hidden setting adjustment buttons, select one of the following settings.

   - "***ON – NORMAL***" - the coin return feature on the Coinco is completely disabled, regardless of what coins are inserted.
   - "***ON – SMART***" - the coin return feature is disabled only when a $1 or $2 coin is inserted.
   - "***OFF***" - the force vend feature is disabled and the unit will function normally.

   c) To save, press either one of the two hidden menu scroll buttons once the desired function is displayed on the LCD.

OPERATION INFORMATION

RESETTING HOPPER AND CHOCOLATE REFILL MESSAGES

1. **To reset the "REFILL HOPPER" or "REFILL CHOCOLATE" messages,**

   a) Press the red "**OPEN BREWER**" button on the inside door panel. The brewer will cycle and stop with the brew chamber in the raised position.

   b) At this point, fill the coffee hoppers and the chocolate syrup container.

   c) Press the "**COFFEE**" button on the front selection panel of the coffee maker to reset the coffee message counter.

   d) Press the "**DECAF**" button on the front selection panel of the coffee maker to reset the decaf message counter.

   e) Press the "**HOT CHOCOLATE**" button on the front selection panel of the coffee maker to reset the chocolate message counter.

   f) Press the red "**OPEN BREWER**" button to cycle the brewer back to the home position.

If the counters have been properly reset when the hoppers and chocolate container were filled, it will be possible to get a fairly accurate reading on their level status. To check their levels, simply press the "**COFFEE**", "50/50", and "**DECAF**" buttons simultaneously. The display will now read,

LH - FULL SH - FULL Choco - FULL 196°F

LH = *large hopper* **SH =** *small hopper* **choco =** *chocolate container*

The status readings that will appear on the display (depending on product usage and if the counters had been properly reset at last filling) are as follows:

FULL
3/4
HALF
1/4
EMPTY

Tip:
*The "**VEND TOTAL**" counter will be displayed immediately after the product status message is displayed.*

PRIMING THE CHOCOLATE PUMP

When a hot chocolate equipped Suprema coffee maker is being initially set-up, or when the chocolate container in the unit gets replaced, air pockets will get trapped inside the pump. These air pockets should be flushed out before the unit is put in service, otherwise the amount of syrup being dispensed will be inconsistent on the first few of cups. It will be necessary to prime the chocolate through the pump by following these steps.

> ➢ ***Note:***
> ***If you are only topping off the chocolate syrup container, it will not be necessary to prime the chocolate pump. However, if the container is completely empty of syrup, the chocolate pump will definitely need to be primed.***

1. **To prime the chocolate pump:**

   a) Press the red "**OPEN BREWER**" button on the inside door panel. The brewer will cycle and stop with the brew chamber in the raised position.

   b) Press the "**HOT CHOCOLATE**" button on the front selection panel, and keep it pressed for approximately five seconds.

   c) At this point, the chocolate pump will cycle four times automatically. No water will be dispensed until the four cycles have been completed. After the cycles are completed, the chocolate valve will open for about two seconds to rinse the whipper bowl and chocolate hose.

SYSTEM STATUS INDICATORS

A feature has been included on this software version that will indicate the system's status. There are indicator symbols on the bottom right corner of the LCD that will always appear. The symbols are outlined below.

SYMBOLS	MEANING OF SYMBOLS
—	When these two symbols toggle from one to the other - microprocessor is OK and heater is off (temperature of water is at proper level)
+ *	When these two symbols toggle from one to the other - microprocessor is OK and heater is on (temperature of water is not yet at proper level)

> ➢ ***Note:***
> ***There is a flashing red LED located on the rear circuit board. This flashing is normal and does not indicate a fault with the system. It indicates that the system is running properly.***

If any one of these symbols is permanently fixed on the bottom right of the display, and does not toggle to the other symbol, the microprocessor is "frozen". To reset the microprocessor, switch the power to the coffee maker off for about ten seconds, and then switch the power on again.

If this does not solve the problem, please contact a technical representative in the VKI Technical Services Department who may be able to assist.

GENERAL INFORMATION

There are several features with this version of software that you should be aware of, and these features are outlined below.

- ☞ If an overflow occurs during a hot chocolate cycle, the machine will stop immediately (anywhere in mid cycle). If an overflow occurs during a coffee vend, the cycle will be completed (without any pauses), and then the unit will stop.
- ☞ A rear overflow will shut everything off, including the heater element. A front overflow will shut off all motors and valves, but will leave the heater element active until the water level drops below the level probes. Power to the element will then be switched off.
- ☞ The **"TANK IS FILLING"** message appears immediately when the unit is powered up (if tank is not full). The **"CHECK WATER SOURCE"** message appears if the tank has not been completely filled after five minutes.
- ☞ There are two fuses in the fuse box. The 5-amp fuse protects electronics, motors and valves. The 15-amp fuse protects the heater circuit.
- ☞ There is only one limit switch for the brewer motor. This switch controls both the pause and the home position. If the brewer does not read the home position, it will run a dry cycle (no water or product) and stop once it reads the home position. If the home position is not found within 24 seconds, the brewer motor will stop and an error message will appear.
- ☞ If the chocolate pump falls out of the home position, it will automatically cycle until it reads the home position, and then it will stop. If the home position is not found within 8 seconds, the pump will stop and an error message will appear on the display.
- ☞ If any blue component harness is not connected to the rear board, a message will appear advising you of the problem. The system will be disabled until the harness is re-connected (with the main power off).
- ☞ The water tank does not have a mechanical level float and switch. It uses three water level probes – two to activate the inlet valve and a safety probe in case the first two get covered in lime/calcium (which causes the level in the tank to increase too high).

> ➢ ***Note:***
> ***Updates to this information will be issued as soon as any changes are made and implemented into the programming.***

- ☞ After a chocolate pump cycle is complete, the valve will open for 0.2 seconds to rinse the chocolate components.
- ☞ When a mixed beverage is selected (café mocha or mixed powder beverage), it is mixed with regular strength coffee ***only***. It cannot be mixed with decaf, and the strength cannot be changed.
- ☞ As a safety feature, if the "**START**" button gets jammed (while pressed) an error message appears - the unit will not continuously brew cups.

RINSE CYCLES

This version of software is equipped with a rinse cycle for both the brewer and the chocolate components. This automated feature allows for simple periodic cleaning of these components. To access the rinse cycles, press the "**RINSE CYCLE**" button on the control panel inside the door and the following message will appear on the display,

RINSE CYCLE
CHOCO. OR COFFEE

> ***Tip:***
> *To keep the equipment clean and running efficiently, these rinse cycles should be performed every time the customer is visited.*

At this point, the words "**CHOCO**." and "**COFFEE**" will flash, alternating from one to the other. This is to advise you that it will be necessary to select the type of rinse that is required. If the chocolate components need rinsing, press the "**HOT CHOCOLATE**" button on the front selection panel. If it is the brewer that requires cleaning, then press the "**COFFEE**" button on the front selection panel.

CHOCOLATE RINSE CYCLE

1. **Activate the chocolate rinse cycle by pressing the "RINSE CYCLE" button on the control panel inside the front door.**

   a) It will now be necessary to select the type of rinse cycle required. For a chocolate rinse, press the "**HOT CHOCOLATE**" button on the front selection panel to begin the cycle.

   b) The chocolate valve will now open and dispense water from the tank for about five seconds, and the whipper will activate. The hot water will flow through the whipper motor and the chocolate door tube rinsing each in the process.

   c) The unit will now automatically exit the rinse cycle and go into the ***"standby"*** mode.

   d) If you require a more thorough rinse, repeat the above procedure as often as necessary.

> ***Note:***
> ***If a rinse cycle is performed for the chocolate components, water will be dispensed through the chocolate door tube. Make certain that the cup stand is in place to catch the liquid being dispensed.***

BREWER RINSE CYCLE

1. **Add <u>VKI approved brewer cleaner</u> to the brew chamber and activate the brewer rinse cycle by pressing the "RINSE CYCLE" button on the control panel inside the front door.**

To cancel the rinse cycle if it was pressed accidentally, press any button (except the "**START**" button) on the front selection panel. This will exit the rinse cycle and return the unit to the "***standby***" mode.

a) Select the type of rinse cycle required. For a brewer rinse, press the "**COFFEE**" button on the front selection panel to begin the cycle.

b) The piston will now move to the top of the cylinder, water will pour in, and the brewer will pause for about 5 minutes. During this time, the cleaner will break down all the oils and stains that have accumulated on the brewer.

To cancel the five-minute pause and proceed to the seven rinse cycles, press the "**START**" button. For proper brewer cleaning, it is recommended that the full cycle be performed.

c) After the 5 minutes have elapsed, the brewer will cycle, dumping the cleaner into the waste container in the process. The brewer will then automatically cycle water seven consecutive times to rinse the cleaner from the brewer. After the rinse cycle is completed, the brewer will stop and the coffee maker will automatically exit the rinse mode.

To cancel the seven rinse cycles, press the "**START**" button. For proper brewer cleaning, it is recommended that the full cycle be performed.

d) After the rinse cycle is complete, brew a few cups of coffee to re-lubricate the brewer.

WARNING: Make sure the waste container is under the brewer spout to catch the water coming from the brewer (throughout the complete rinse cycle).

DOWNLOADING SOFTWARE AND TRANFERRING SETTINGS

DOWNLOADING SOFTWARE UPDATES USING THE VKI DATA LINK

For downloading software updates into the Suprema unit, it is necessary to purchase a VKI Data Link downloader. This device allows you to download software updates, as well as transfer settings quickly and easily from one coffee maker to another. A DB9 cable and a phone jack harness are required to interface the Data Link to the coffee maker. Updates to the software will be provided on an eprom from VKI Technologies. This eprom will then need to be inserted into the Data Link. Please note that only one eprom is needed in the Data Link to program as many Suprema coffee makers as needed.

The following procedures are required to download software updates from the Data Link device to the coffee maker. Following this procedure will not change any settings that have already been programmed into the software.

1. **Switch the power to the coffee maker "OFF".**

2. **Interface the Data Link with the coffee maker.**

   a) Open the front door.

   b) Open the inner door.

   c) The RS232 connector (illustrated below) is located above the control panel on the inside of the front door.

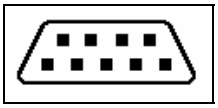

   d) Connect one end of the DB9 cable to the RS232 connector on the Data Link, and connect the other end of the cable to the RS232 connector inside the coffee maker.

   e) Connect one end of the Data Link phone jack harness to the phone jack connector on the Data Link, and connect the other end of the phone jack harness to the free phone jack connector on the back of the front board.

3. **Press the "50/50" button on the front selection panel of the coffee maker, and switch the power to the coffee maker "ON" (you must keep the "50/50" button pressed throughout the whole procedure, until the display reads "DATA LINK").**

DOWNLOADING SOFTWARE UPDATES USING THE VKI DATA LINK (continued)

4. **Select the function required on the Data Link.**

   a) When first powered up, both the "**DOWNLOAD PROGRAM**" and "**DOWNLOAD FACTORY SETTINGS**" LED's will be lit, indicating that both these functions will be active.

   b) For downloading the program, without changing the software settings, press the "**DOWNLOAD FACTORY SETTINGS**" button to switch off it's LED, disabling this function. At this point, only the power LED and the "**DOWNLOAD PROGRAM**" LED should be lit on the Data Link. Once activated, the Data Link will only update the software, leaving the product settings, water settings, pricing, etc., unchanged from what was previously programmed.

   c) To download the software update, and change all the values to factory settings, both the "**DOWNLOAD PROGRAM**" and "**DOWNLOAD FACTORY SETTINGS**" LED's should be lit, indicating that both of these functions are active.

5. **Press the "START" button on the Data Link to activate the downloading procedure.**

6. **The program will now download automatically. The downloading procedure will take approximately three minutes.**

WARNING: Do not interrupt this procedure once it is in progress as data being transferred may become corrupted, creating problems with the operation of the coffee machine.

7. **Remove the DB9 cable and Data Link phone jack harness.**

8. **Reconnect the coin changer phone jack harness to the front board and close the inner and outer doors.**

➢ ***Note:***
If the "INCORRECT EPROM" LED is lit on the Data Link, it is an indication that the software being downloaded is not compatible with the rear board in the equipment. Check the software level printed on the eprom decal.

Also note that if the eprom is not inserted properly into the Data Link socket, all the LED's on the Data Link will illuminate.

TRANSFERRING SETTINGS FROM ONE SUPREMA TO ANOTHER

> ➢ ***Note:***
> ***Although the identical settings will be transferred from a pre-programmed unit to a non-programmed unit, some fine-tuning may be required for product and water settings. This is due to slight differences with the tolerances of certain components, such as valves, motors and ingredient dispensers.***

Using the VKI Data Link downloader, it is possible to for you to transfer all the settings from one Suprema coffee maker, to one or several other Suprema coffee makers. For example, if a customer requests three Suprema coffee makers with the exact same settings, only one needs to be set up. Once the first unit is programmed, the settings can be loaded into the Data Link, and then downloaded from the Data Link to the other two units. This will eliminate the need to repeatedly program multiple units with the same settings. All the settings in the "**SET-UP**" mode will be transferred, with the exception of the counters.

To transfer settings from one Suprema coffee maker to another, the procedure outlined below must be performed. This needs to be done with the power to the coffee machine "**ON**".

STEP 1 - TRANSFERRING SETTINGS TO THE DATA LINK DEVICE

1. **Connect the Data Link phone jack harness to the free connector on the back of the front board.**

2. **Press the "SET-UP" button on the back of the front board.**

   a) The following message will appear on the display,

COPY DATA LINK TO SET-UP

3. **Press the bottom scroll button to the right of the "START" button.**

   a) The following message will appear on the display,

COPY SET-UP TO DATA LINK

4. **Press the "START" button on the Suprema front selection panel.**

   a) The settings in the Suprema "**SET-UP**" will now be transferred to the Data Link device.

STEP 2 - TRANSFERRING SETTINGS FROM THE DATA LINK DEVICE TO A SUPREMA

1. **Connect the Data Link phone jack harness to the free connector on the back of the front board.**

2. **Press the "SET-UP" button on the back of the front board.**

   a) The following message will appear on the display,

COPY DATA LINK TO SET-UP

3. **Press the "START" button on the Suprema front selection panel.**

   a) A list of options to be transferred will then appear on the display. The first option is "**COPY ALL – SET-UP**" (defaulted to "**YES**") will transfer "**ALL**" the settings. If the "**UP**" button is pressed, "**NO**" will appear. Press "**START**" to get to the next option, and repeat as necessary. **We recommend that the "ALL" option be used to prevent any possible conflicts in the set-up**.

STEP 3 - TRANSFERRING CUSTOM MESSAGES TO A SUPREMA

(may not be required)

If multiple Suprema coffee makers require the same custom message to be displayed, this too can be transferred from one unit to several others. Simply program the custom message on the first unit, and perform STEP 1 on the previous page (Transferring Settings to the Data Link Device). Once done, follow the procedure outlined below. This procedure will transfer ONLY the custom message. Please note, however, that performing STEP 2 (above) will transfer all settings, including custom messages.

1. **Connect the Data Link phone jack harness to the free connector on the front board.**

2. **Press the "SET-UP" button on the back of the front board.**

   a) The following message will appear on the display,

COPY DATA LINK TO SET-UP

3. **Press the bottom scroll button to the right of the "START" button twice.**

   a) The following message will appear on the display,

COPY CUSTOM MSG. TO SET-UP

4. **Press the "START" button on the Suprema front selection panel.**

   a) The custom message in the Data Link device will now be transferred to the Suprema "**SET-UP**".

INDICATOR MESSAGES (in alphabetical order)

MESSAGE	POSSIBLE CAUSE	CORRECTIVE ACTION
BREWER HOME ERR PRESS <START>	The brewer is not in the home or starting position.	➲ Press the "START" button to cycle the brewer. ➲ The home switch may be defective or needs to be re-adjusted or cleaned. ➲ An electrical connection to the brewer home switch is faulty. ➲ The brewer brake may not be working properly. Adjust the brake or replace the brewer motor.
CALL KEY OPERATOR	The cashbox has accumulated $220 or more and needs to be emptied.	➲ Empty the cashbox and clear the "CASHBOX TOTAL" counter.
CHECK CHOCOLATE HARNESS/SETTINGS	The chocolate harness is not connected to the rear board.	➲ Connect the chocolate harness to the rear board. ➲ The chocolate products are enabled on a non-chocolate equipped unit. Disable hot chocolate and/or cafe mocha.
CHECK CHOCO PUMP	Chocolate pump cannot find the home position.	➲ The chocolate harness is not connected properly to the pump or board.
CHECK FOR A JAMMED BUTTON	"START" button or "HOT WATER" button is stuck pressed down.	➲ Fascia may be binding against the side of the "START" button or "HOT WATER" button. Re-align fascia or trim fascia around the button(s). ➲ "START" button or "HOT WATER" button may have collapsed. Replace front board.
CHECK WATER TEMP. HARNESS	The temperature probe harness is not connected to the rear board.	➲ Connect the temperature probe harness to the rear board
COIN CHANGER NOT INSTALLED	The system is set to "COIN" mode, but a coin changer is not installed.	➲ Install a coin changer. ➲ Switch to "FREE" mode.
DEFECTIVE COIN CHANGER SENSOR	A sensor in the coin changer is defective.	➲ Replace the coin changer.
EMPTY GROUNDS CONTAINER	The waste container is full and needs to be emptied.	➲ Empty the grounds container and reset the message by pressing the red "OPEN BREWER" button (the button must then be pressed a second time to complete the cycle).
EMPTY - REFILL CHOCOLATE BOTTLE	Chocolate container needs to be filled.	➲ If the chocolate container is already full, the caretaker may have forgotten to reset the message.
EMPTY - REFILL LARGE/SMALL HOPPER	Coffee hoppers need to be filled.	➲ If the coffee hoppers are already full, the caretaker may have forgotten to reset the message(s)

MESSAGE	POSSIBLE CAUSE	CORRECTIVE ACTION
ENTER SET-UP SET TEMPERATURE	The rear board is set for a mechanical thermostat, but the machine is equipped with an electronic temperature probe.	➲ Go to the "**SET TEMPERATURE**" menu and set the electronic temperature probe.
INCOMPATIBLE SOFTWARE LEVEL	The software version (EPROM) in the Data Link downloader in not compatible with this equipment and will be downloaded.	➲ Replace the software version (EPROM) with one that is compatible with the Suprema model. The words "**SUPREMA**" will be printed on the EPROM decal.
PLEASE CALL FOR ROUTINE SERVICE	This message is a reminder that regular maintenance may be due and will not stop the operation of the coffee maker.	➲ The coffee maker is due for routine maintenance. ➲ To reset the message, enter the "**SET-UP**" and reset the service counter.
PLEASE CHECK BREWER HARNESS	The brewer harness is not connected to the rear board.	➲ Connect the brewer harness to the rear board.
PLEASE CHECK OVERFLOW HARNESS	Overflow harness is not connected to the rear board.	➲ Connect the overflow harness to the rear board.
PLEASE CHECK TANK HARNESS	The water tank harness is not connected to the rear board.	➲ Connect the water tank harness to the rear board.
PLEASE CHECK WATER SOURCE	Indicates a problem with the main water supply not getting to the water tank.	➲ At this point, the water tank is not full and this message has to be reset. To reset it, switch the power off and on. ➲ If the problem persists, check all components on the water line (water filter, tubing, fittings, etc.). ➲ Check inlet valve to make certain it is functioning properly. ➲ In the case of a temporary disruption with the water supply, the coffee maker will reset itself after every hour.
PRESS PRODUCT TO RESET MESSAGE	The "**OPEN BREWER**" button has been pressed.	➲ Pressed the "**OPEN BREWER**" button once more to close the brewer and exit. ➲ At this point, pressing the appropriate buttons on the front selection panel will reset the product counters.
PROBES CALL FOR SERVICE	The main level probes are covered with lime/calcium.	➲ The water tank may require deliming. ➲ The main level probes need to be cleaned/delimed.
SELECTION NOT AVAILABLE	Product selected may be disabled.	➲ Check the "**ENABLE SWITCHES**" menu to see if product has been canceled. ➲ Check the price of the selection to make certain it has not been disabled (set below zero).

MESSAGE	POSSIBLE CAUSE	CORRECTIVE ACTION
SELECT – THEN PRESS <START>	Coffee maker is in "***standby***" mode.	➲ None required.
TANK IS FILLING PLEASE WAIT	Indicates that the water tank has not yet been filled with water.	➲ Please wait a few minutes for the tank to fill. If it takes too long, a "**PLEASE CHECK WATER SOURCE**" message will appear.
TANK OVERFLOW! OPEN AND DRY CATCH	The rear overflow catch may be full of water.	➲ Clean and dry the tank overflow catch. ➲ Verify the water level probes. They may be covered with lime or scale. Clean the probes or delime the water tank components. ➲ Inlet valve may be leaking, constantly allowing water to enter the tank. Replace the inlet valve. ➲ Water in the tank may be boiling. Turn temperature down to 185-195 °F. ➲ If message cannot be cleared, rear board may be wet. Replace the board and let the wet one dry overnight.
WATER OVERFLOW EMPTY & DRY CATCH	The front overflow catch may be full of water or coffee.	➲ Clean and dry the front overflow catch. ➲ The cup stand may be full of liquid. Empty and clean cup stand and catch. ➲ The hot water valve may be leaking. Repair or replace hot water valve. ➲ If the message cannot be cleared, the rear board may be wet. Replace the board and let the wet one dry overnight.

REPLACING MAJOR COMPONENTS

REMOVING THE BREWER

1. **Press the red "OPEN BREWER" button.**
   a) The brewer motor will cycle and stop with the chamber in the open position.

2. **Release the brewer lock pin.**
   a) Lower the lock pin by pulling it down all the way.
   b) Turn the pin to the left until it is directly below the flange, and release.

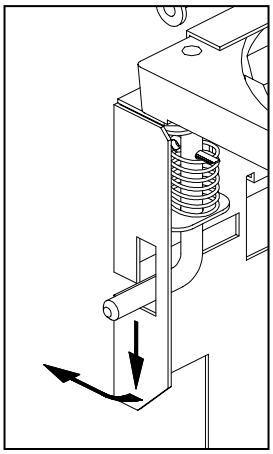

Brewer lock pin

3. **Remove the brewer from the brewer bracket.**
   a) Gently grasp the brewer with one hand on the top, and the other hand on the bottom.
   b) Pull the brewer towards you until it is free from the bracket.

INSTALLING THE BREWER

1. **Press the red "OPEN BREWER" button.**
   a) The brewer motor will cycle and stop in a position where it will accept the brewer with the chamber open.

2. **Place the brewer onto the brewer bracket.**
   a) Make sure that the brew chamber is open.
   b) Gently grasp the brewer, with one hand on the top, and the other hand on the bottom.
   c) Align the top edge of the brewer with the locating flanges on the brewer bracket. One flange is at the left side of the bracket and the other is at the back of the bracket.
   d) Push the brewer into place to engage the brewer drive pin with the slot in the motor coupling. If it does not align, move the brewer crank arm slightly until you feel the brewer engaging with the motor coupling.

3. **Engage the lock pin.**
   a) Release the lock pin from under the front flange and engage it with the hole located on the front left side of the brewer. The brewer should now be firmly in place.

REMOVING THE BREWER MOTOR

1. **Remove the brewer.**
2. **Remove the brewer bracket.**
   a) Loosen, but do not remove, the two top screws from the left side of the brewer bracket.
   b) Remove the center screw from the left side of the brewer bracket (this screw may not be used on certain types of brewer brackets).
   c) Lift the bracket clear of the mounting "joggle" and pull forward.
   d) Disconnect the brewer harness from the rear board.
3. **Remove the two lower screws attaching the motor to the bracket.**
   a) These screws are located below the drive coupling.
4. **Loosen the two upper screws.**
5. **Lift the motor and switch assembly up and clear of the key-hole slots.**
6. **Remove the switch assembly.**
   a) Remove the three screws that secure the bracket to the motor.
   b) Disconnect the wires from the brewer motor.

INSTALLING THE BREWER MOTOR

1. **Install the brewer motor onto the brewer bracket.**
   a) Align the two upper screws on the motor with the key-hole slots.
   b) Install the two lower screws.
   c) Tighten all four screws.
2. **Re-connect the wires to the brewer motor.**
   a) Wires #8 and #9.
3. **Re-install the brewer bracket assembly.**
4. **Replace the brewer.**

REMOVING THE INLET VALVE

1. **Switch the coffee maker "OFF".**
2. **Shut off the water supply.**
3. **Drain the water tank completely.**
4. **Remove the fitting from the inlet valve at the back of the machine.**
5. **Disconnect the two wires that go to the inlet valve.**
6. **Disconnect the inlet hose from the hot water tank.**
   a) Remove the clamp securing the hose to the inlet fitting at the bottom of the water tank.
   b) Pull firmly on the hose to remove it.
7. **Remove the screws that secure the inlet valve to the back of the machine.**

INSTALLING THE INLET VALVE

1. **Make sure the coffee maker is switched "OFF".**
2. **Position the valve in place and secure it with the two screws.**
3. **Replace the two wires onto the inlet valve.**
   a) Wires #6-1 and #7-1.
4. **Secure the hose (using a hose clamp) to the inlet at the bottom of the water tank.**
5. **Connect a fitting to the inlet valve at the back of the machine.**
6. **Turn on the water supply.**
7. **Switch the coffee maker "ON".**
8. **Inspect for any leaks.**

REMOVING THE OUTLET VALVES

1. **Turn off the water supply to the machine.**

2. **Switch off the power to the machine.**

3. **Drain the water tank to a level below the valves.**
   a) Remove the top clip from the drain plug, then push it up to open.

4. **Remove the valve cover.**
   a) Remove the screws that secure it in place.

5. **Disconnect the wires from the valve you wish to remove.**
   a) Coffee valve wires are numbered #3 and #1-8. Hot water valve wires are numbered #2 and #1-7. Chocolate valve wires are numbered #4 and #1-6. The green ground wires also need to be disconnected.

6. **Pull the valve(s) out towards you.**

CAUTION: Water coming out of the water tank may be extremely hot. Use caution when removing the outlet valves.

INSTALLING THE OUTLET VALVES

1. **Immerse the valve seal support in warm water and insert it into the tank outlet tube.**

2. **Insert the valve into the appropriate outlet of the hot water tank.**
   a) The top outlet is for chocolate, the center is for hot water and the lower is for coffee water.

3. **Re-connect the valve wires.**
   a) Coffee valve wires are numbered #3 and #1-8. Hot water valve wires are numbered #2 and #1-7. Chocolate valve wires are numbered #4 and #1-6. The green ground wires also need to be reconnected.

4. **Attach the hoses.**
   a) The brown hose goes onto the coffee valve, the hose to the whipper goes onto the chocolate valve, and the other hose goes to the hot water valve.

5. **Position the coffee hose (brown) into the brewer funnel.**

6. **Turn on the water supply to the machine, and switch the power on.**

7. **Check for leaks.**

8. **Allow the water tank to fill and test all valves.**

9. **Replace the valve cover.**

REMOVING THE WATER TANK ASSEMBLY

1. **Switch the coffee maker "OFF".**

2. **Drain the water tank.**
   a) Place a heat-resistant and leak-proof container beneath the water tank.
   b) Remove the top clip on the drain plug and push the drain plug upwards. The bottom clip will act as a stopper.

CAUTION: Water coming out of the water tank may be extremely hot. Use caution when removing the outlet valves.

3. **Remove the brewer.**

4. **Disconnect the inlet hose.**
   a) Remove the hose clamp securing the inlet hose to the inlet fitting.

5. **Remove the valve cover on the water tank.**

6. **Remove the hose from the hot water valve.**

7. **Remove the hose fitting from the whipper motor (if installed).**

8. **Disconnect the water tank harness from the rear board.**

9. **Disconnect the temperature probe harness from the rear board.**

10. **Disconnect the wires identified in the table below.**

WIRE	CONNECTED TO:
#1-2 on General Harness	Whipper Motor
#8-1 on General Harness	Whipper Motor
#11-1 on Tank Harness	Wire **#3-2** on Fuse Box Harness
#6 on Tank Harness	Inlet Valve
#1-2 on Tank Harness	Inlet Valve
#11 on Fuse Box Harness	Stud **#3** on Heater Relay
#13-1 (ground wire)	Ground Stud on Rear Board Cover

**For more information about wiring, consult the wiring section of this manual.*

11. **Carefully slide the water tank forward and out of the machine.**

INSTALLING THE WATER TANK

1. **Align the tank assembly on its mounting rail, and slide it into the cabinet.**
2. **Connect the water tank harness to the rear board.**
3. **Connect the temperature probe harness to the rear board.**
4. **Connect the wires identified in the table below.**

WIRE	CONNECTED TO:
#1-2 on General Harness	Whipper Motor
#8-1 on General Harness	Whipper Motor
#11-1 on Tank Harness	Wire **#3-2** on Fuse Box Harness
#6 on Tank Harness	Inlet Valve
#1-2 on Tank Harness	Inlet Valve
#11 on Fuse Box Harness	Stud **#3** on Heater Relay
#13-1 (ground wire)	Ground Stud on Rear Board Cover

**For more information about wiring, consult the wiring section of this manual.*

5. **Connect the inlet valve hose to the bottom of the tank using a hose clamp.**
6. **Connect the hot water hose to the hot water valve.**
7. **Connect the chocolate hose fitting to the whipper assembly.**
8. **Install the valve cover.**

REMOVING THE WATER TANK LID ASSEMBLY

1. **Remove the water tank from the coffee maker.**
   a) Refer to the "Removing The Water Tank Assembly" in this manual.
2. **Disconnect wires #9 and the wire from the thermal cut-off switch going to the heater element.**
3. **Disconnect the 3-position wiring receptacle from the water level switch.**
4. **Disconnect wire #14 going to thermal cut-off switch.**
5. **Remove the lid assembly.**
   a) Press the lock latch on the lid to free it.
   b) Lift the assembly up and out of the water tank.

INSTALLING THE WATER TANK LID ASSEMBLY

1. **Lower the lid assembly into the water tank.**
   a) Slide the back of the lid into the tank first, and push the front down until the latch engages.
2. **Connect wires #9 and the wire from the thermal cut-off switch to the heater element.**
3. **Connect the 3-position wiring receptacle to the water level switch.**
4. **Connect wire #14 to thermal cut-off switch.**
5. **Re-install the water tank.**
   a) Refer to the "Installing the Water Tank" instructions in this manual.

REMOVING THE HEATER ELEMENT

1. **Remove the water tank.**
   a) Refer to the "Removing the Water Tank" instructions in this manual.

2. **Remove the lid assembly.**
   a) Refer to the "Removing the Water Tank Lid" instructions in this manual.

WARNING: To avoid severe burns, make absolutely certain that the heater element is not hot before proceeding!

3. **Remove the two 11/16" brass nuts securing the heater element to the lid.**

4. **Remove the heater element.**

5. **Detach the thermal cut-off probe from the heater element.**
   a) Remove plate/clamp securing the thermal cut-off probe to the element.

INSTALLING THE HEATER ELEMENT

1. **Position the heater element into the tank lid.**
   a) The "curve" at the bottom of the heater element should point towards the rear of the tank.

2. **Secure the element to the tank lid with the two 11/16" brass nuts.**

3. **Replace thermal shut-off plate/clamp and probe.**

4. **Replace the lid assembly.**
   a) Refer to the "Installing the Water Tank Lid" instructions in this manual.

5. **Replace the water tank.**
   a) Refer to the "Installing the Water Tank" instructions in this manual.

REMOVING THE DRAIN VALVE

To remove the drain valve on a plastic water tank, it will be necessary to drain and completely remove the tank from the coffee maker. The drain plug can only be removed from the interior of the water tank.

1. **Remove the water tank.**
   a) Refer to the "Removing the Water Tank" instructions in this manual.

WARNING: To avoid severe burns, make absolutely certain that the heater element is not hot before proceeding!

2. **Remove the drain valve.**
   a) Remove the upper and lower clips on the drain plug.
   b) Push drain plug upwards until it goes through the bottom of the tank (to the inside).
   c) Remove the tank lid.
   d) Reach inside the tank and remove drain plug.

INSTALLING THE DRAIN VALVE

1. **Install the drain valve.**
   a) Remove tank lid.
   b) Add new o-rings to the drain valve.
   c) From the top of the tank, push the drain valve through the bottom (front tube).
   d) Install the clips. The smaller clip goes on the top slot, and the larger goes on the bottom slot of the drain valve.

➢ ***Note:***
The center tube at the bottom of the tank is for the water inlet hose fitting, and the rear tube is not used.

REMOVING THE INGREDIENT DISPENSER

1. **Switch off the power to the machine.**
2. **Remove the brewer.**
3. **Slide the water tank outward. The water tank wrap supports the right side of the ingredient dispenser base**
4. **Release the ingredient dispenser bracket support on the left wall of the cabinet.**
   a) Remove the screw securing the bracket to the left wall of the cabinet.
   b) Rotate the support backwards until it is horizontal. The ingredient dispenser will now drop.
5. **Raise the ingredient dispenser lid on top of the coffee maker.**
6. **Remove the ingredient dispenser.**

INSTALLING THE INGREDIENT DISPENSER

1. **Position the drive pins of the motor so they are all vertical.**
2. **Position the drive couplings of the ingredient dispenser so that they are vertical.**
3. **Place the ingredient dispenser on the ingredient dispenser bracket.**
   a) Make sure the ingredient lid is up and the ingredient dispenser couplings and motor drive pins mate.
4. **Slide the water tank forward. The water tank wrap supports the right side of the ingredient dispenser base.**
5. **Secure the bracket support on the left wall of the cabinet.**
   a) Rotate the bracket support on the left wall of the cabinet forward so that it lifts the ingredient dispenser base, and secure with a screw.
6. **Replace the brewer.**
7. **Switch the coffee maker "ON".**
8. **Close the ingredient dispenser lid.**

REMOVING AN INGREDIENT DISPENSER MOTOR

1. **Remove the ingredient dispenser.**
   a) Refer to the "Removing Ingredient Dispenser" instructions in this manual.
2. **Remove the brewer bracket.**
3. **Disconnect the wires to the ingredient motors.**
4. **Remove the ingredient dispenser bracket.**
   a) Pull up on the ingredient dispenser bracket to free it from the joggle on the back wall of the cabinet.
   b) Pull the dispenser bracket towards the front of the cabinet and remove.
5. **Remove the two screws that secure the motor to the bracket (located above the drive pin).**
6. **Slide the motor down and out of the bracket.**

INSTALLING AN INGREDIENT DISPENSER MOTOR

1. **Slide the motor into the back of the bracket from underneath.**
2. **Replace the two upper screws.**
3. **Connect the appropriate wires to the motors.**
   a) Wires #3 and #12-2 are for the large section of the ingredient dispenser (coffee). Wires #4 and #12-1 are for the small section (decaf).
4. **Install the ingredient dispenser bracket.**
5. **Install the ingredient dispenser.**
   a) Refer to the "Installing Ingredient Dispenser" instructions in this manual.
6. **Install the brewer bracket.**
7. **Install the brewer.**

REMOVING THE SUPREMA FRONT BOARD

1. **Open the inner door.**
2. **Disconnect any harnesses connected to the front board.**
3. **Remove the front board assembly.**
   a) Remove the two screws securing it in position (located at the top corners of the board assembly on the inside of the front door).
4. **From the outside of the door, lift and remove the front board.**

INSTALLING THE SUPREMA FRONT BOARD

1. **Place the front board assembly (bottom first) onto the outside of the front door.**
2. **Secure the front board assembly in place.**
   a) Install the two screws to secure it into position (located at the top corners of the board assembly on the inside of the front door).
3. **Connect the phone type cables and free vend key switch harness (if used) to the front board.**
4. **Close and lock the inner door.**

REMOVING THE REAR CIRCUIT BOARD

1. **Switch the coffee maker "OFF".**
2. **Open the outer door.**
3. **Remove the waste container.**
4. **Remove the brewer.**
5. **Remove the brewer bracket.**
   a) Loosen, but do not remove, the two screws on the left side of the brewer bracket.
   b) Remove the center screw (on the left side in the middle) from the brewer bracket.
   c) Lift the brewer bracket until it clears the mounting "joggle" and carefully pull it forward.
   d) Unplug the brewer wiring harness from the rear board.
   e) Set the bracket aside.

> ➢ ***Note:***
> ***The settings and counters are stored in the rear circuit board. If the board is replaced, the information will be lost.***

6. **Slide the water tank forward, approximately 3 inches (8 cm).**
7. **Disconnect all the wiring harnesses from the rear board.**
8. **Remove the screw that secures the rear board to the back wall of the coffee maker (located on the right side of the rear board cover).**
9. **Remove the rear board.**
   a) Grasp the board and lift it up to free it from the joggle.

INSTALLING THE REAR BOARD

1. **Place the rear board onto the joggle on the rear wall of the machine.**
   a) Place the board on the back wall and slide it downwards until it aligns with the joggle.
   b) Hold it in place and secure it to the cabinet with a screw.
2. **Connect all the cables and harnesses.**
   a) All the connectors are polarized as a protection and to help simplify connections. This means that the harnesses can only be connected in their proper location, as they will not fit onto any other location.
3. **Slide the water tank back into place.**
4. **Install the brewer bracket.**
   a) Connect brewer harness to the rear board.
   b) Install the brewer bracket onto the joggles and lower into position.
5. **Replace the brewer.**
6. **Replace the waste container.**
7. **Switch the coffee maker "ON".**
8. **Adjust all the settings (gram throws, water volumes, etc.).**

REMOVING THE FUSE BOX ASSEMBLY

1. **Switch off the machine power and disconnect the service cord from the wall outlet.**
2. **Remove the brewer.**
3. **Remove the brewer bracket assembly.**
4. **Disconnect the wires identified in the table below.**

WIRE	CONNECTED TO:
#3-2 on fuse box harness	**#11** on water tank harness
#3-3 on fuse box harness	**#12-3** on general harness
#5 on fuse box harness	Ground stud on rear board cover
#6-1 on fuse box harness	Inlet Valve
#7-1 on fuse box harness	Inlet Valve
#6-3 on fuse box harness	**#6** on water tank harness
#7-3 on fuse box harness	**#1-2** on water tank harness
#2 on fuse box harness	**#10-1** on general harness
#11 on fuse box harness	**Stud #3** on heater relay

Tip:
Whenever the fuse box is removed, make sure you inspect the wiring and the tabs inside the box before re-installing it.

5. **Disconnect the ground wire attached to the left wall of the machine.**
6. **Remove the two screws securing the fuse box.**
7. **Lift and pull on the fuse box to remove it.**

INSTALLING THE FUSE BOX ASSEMBLY

1. **From inside the cabinet, put the service cord through the fuse box location cutout in the back of the cabinet.**
2. **Place the fuse box into position.**
3. **Align the holes on the fuse box with the holes on the cabinet wall.**
4. **Secure with two screws.**
5. **Connect the wires identified in the table below.**

WIRE	CONNECTED TO:
#3-2 on fuse box harness	**#11** on water tank harness
#3-3 on fuse box harness	**#12-3** on general harness
#5 on fuse box harness	Ground stud on rear board cover
#6-1 on fuse box harness	Inlet Valve
#7-1 on fuse box harness	Inlet Valve
#6-3 on fuse box harness	**#6** on water tank harness
#7-3 on fuse box harness	**#1-2** on water tank harness
#2 on fuse box harness	**#10-1** on general harness
#11 on fuse box harness	**Stud #3** on heater relay

**For more information about wiring, consult the wiring section of this manual.*

6. **Connect the ground wire to the cabinet wall.**
7. **Replace the brewer bracket assembly.**
8. **Replace the brewer.**
9. **Plug in the service cord.**
10. **Switch the coffee maker "ON".**

ELECTRICAL WIRING DIAGRAMS

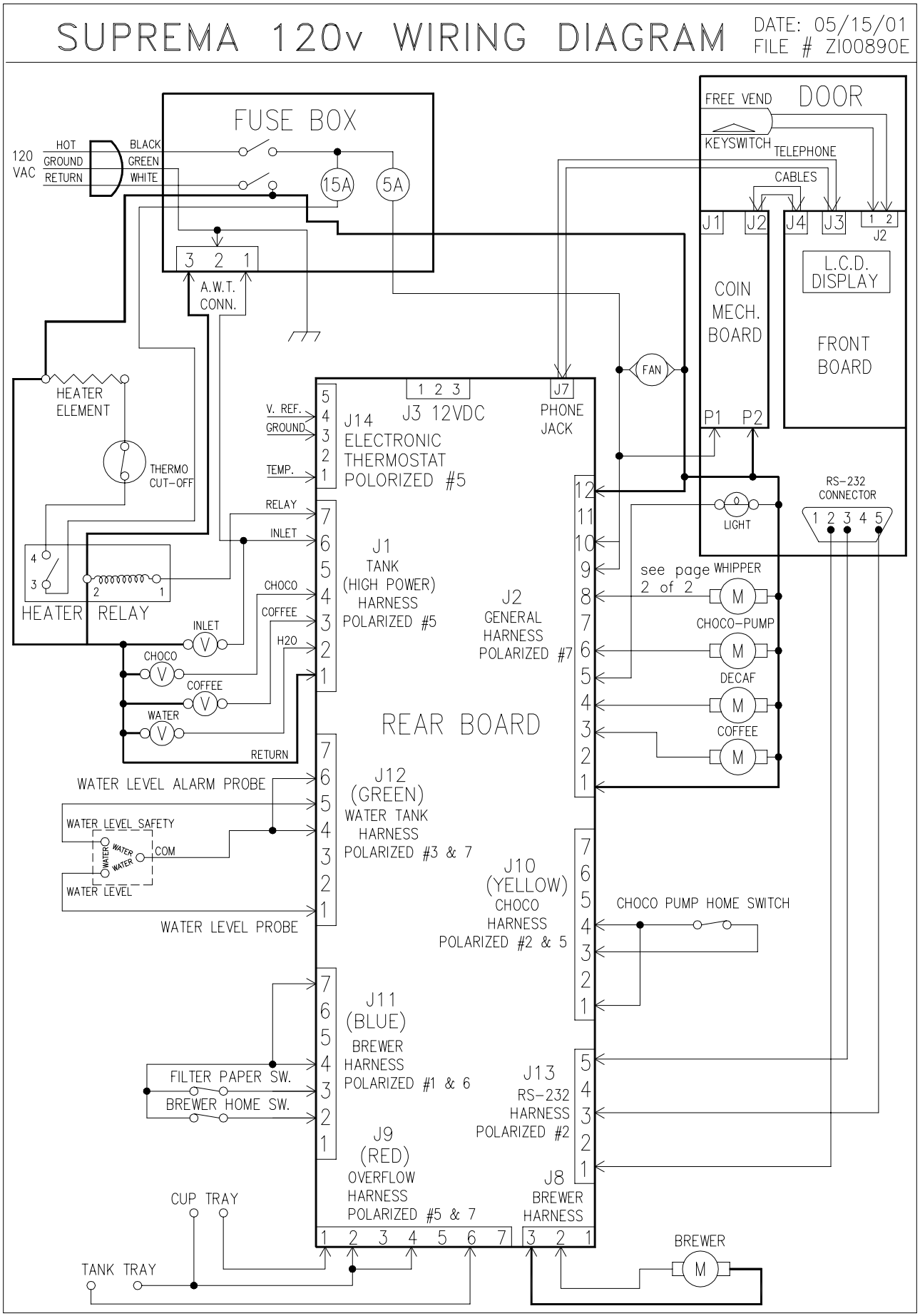

HARNAIS, INFUSEUR/BREWER HARNESS

VISTA NT **/ SUPREMA** G310249

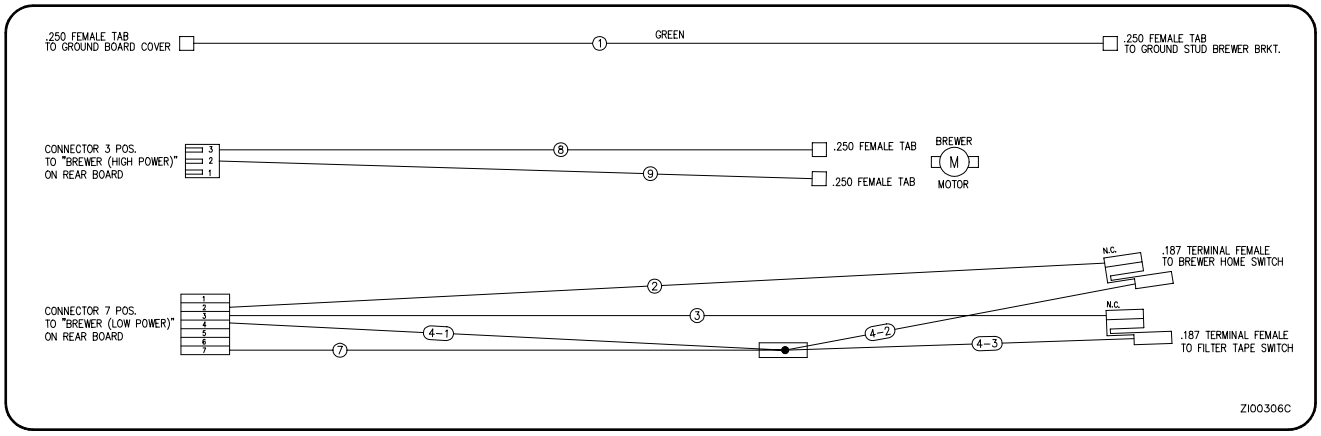

HARNAIS, DÉBORDEMENT/OVERFLOW HARNESS

VISTA NT **/ SUPREMA** G310253

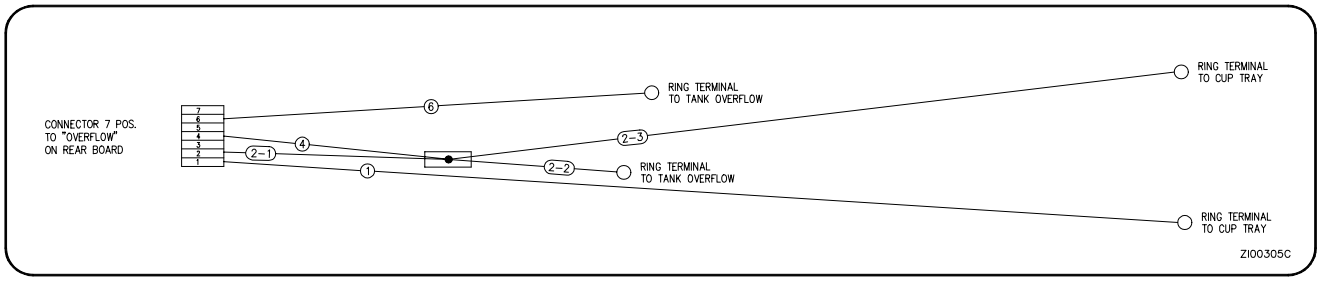

ASSEMBLÉE, SONDE DE TEMPÉRATURE/TEMPERATURE PROBE, ASSEMBLY

VISTA NT **/ SUPREMA** G210220

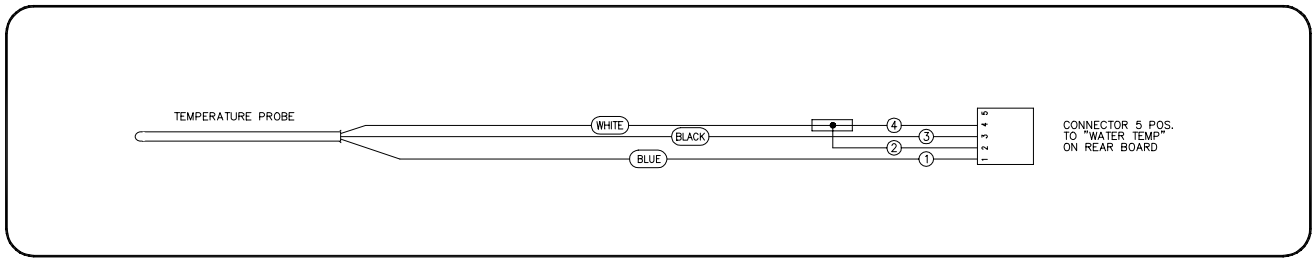

HARNAIS, POMPE CHOCOLAT/CHOCO. PUMP HARNESS

VISTA NT **/ SUPREMA** G410189

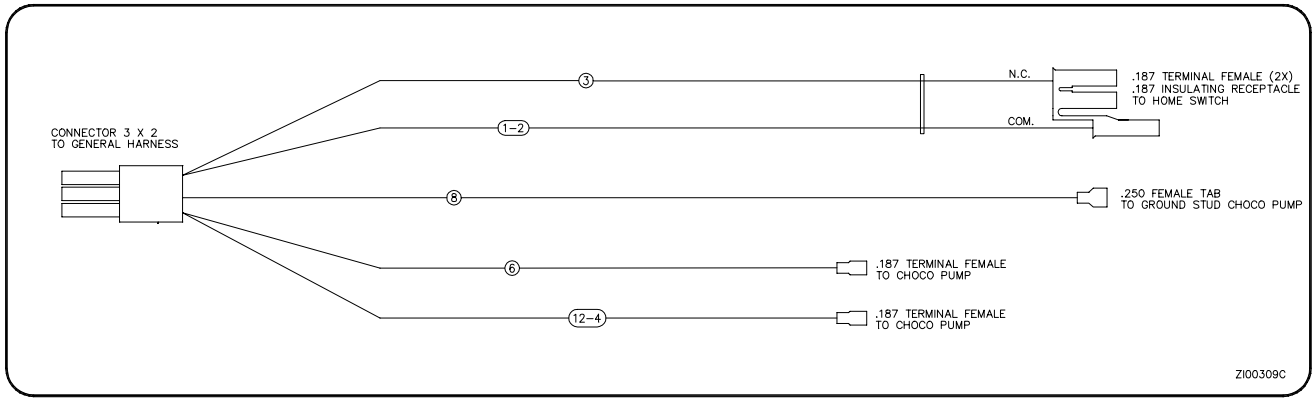

HARNAIS, BOITIER FUSIBLE/FUSE BOX HARNESS

VISTA NT **/ SUPREMA** G210190

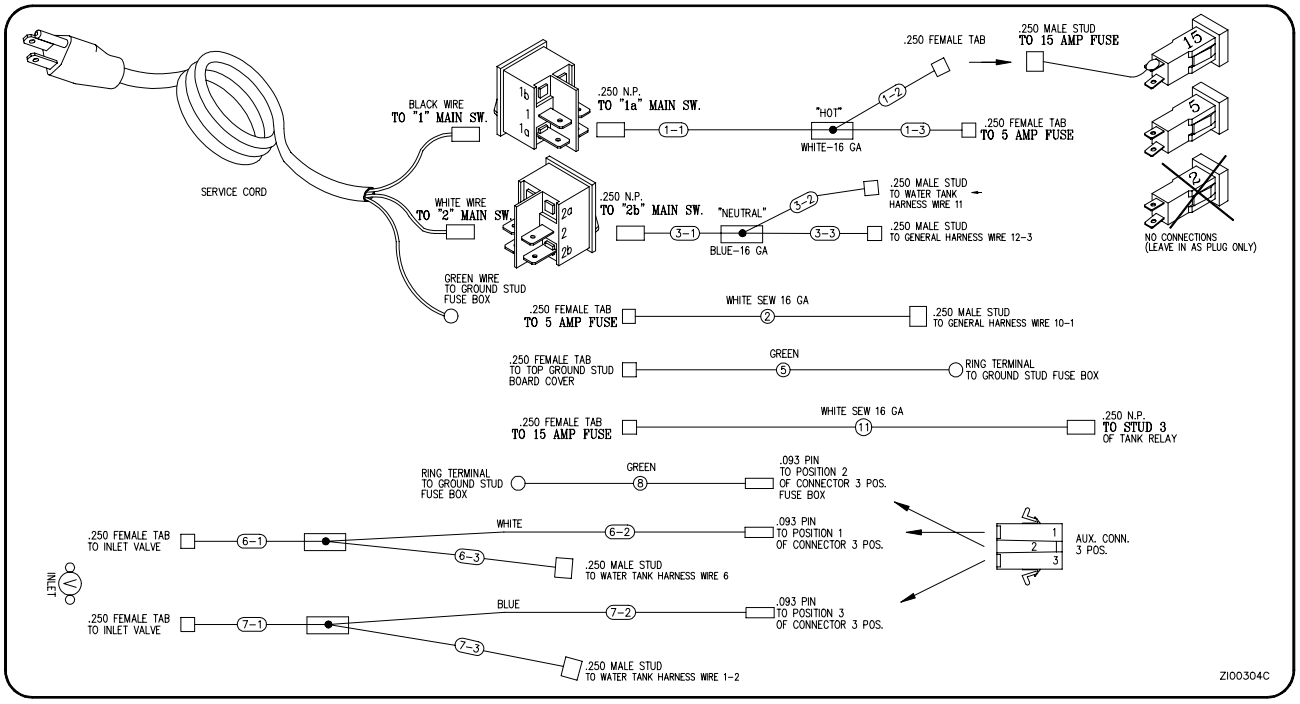

HARNAIS PRINCIPALE\GENERAL HARNESS

VISTA NT **/ SUPREMA** G410188

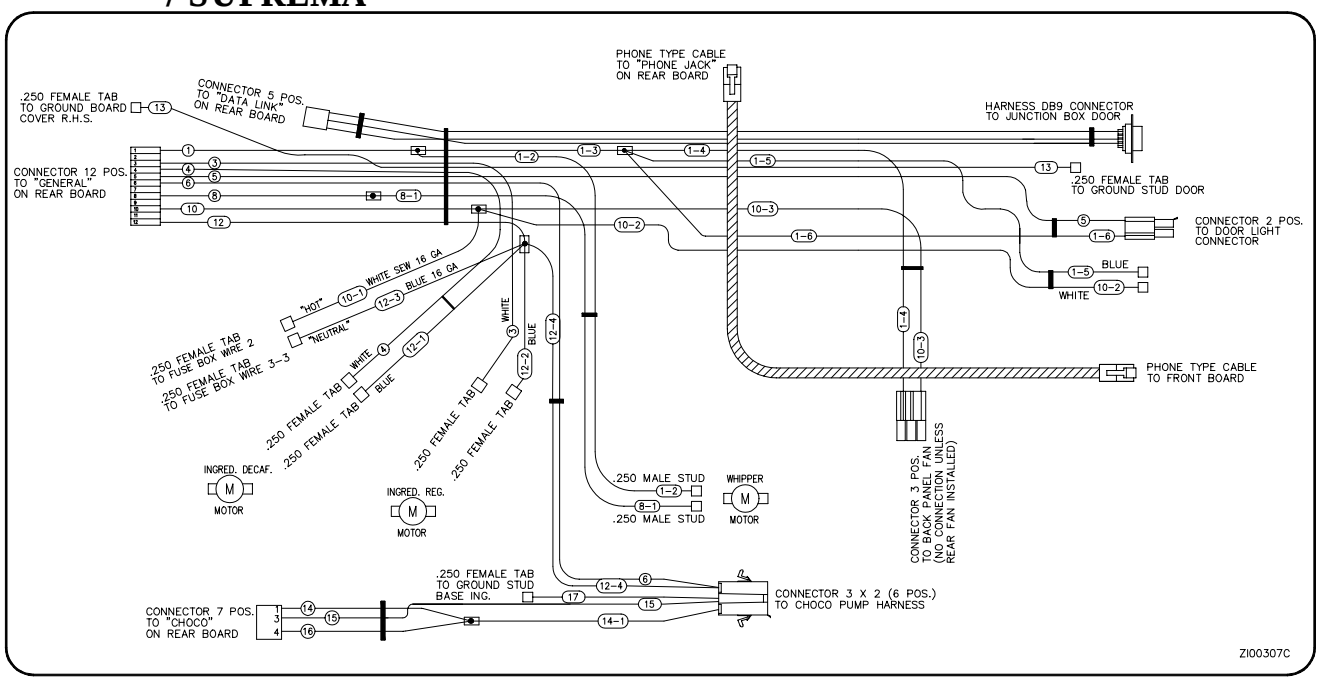

HARNAIS, RÉSERVOIRE, EAU CHAUDE / WATER TANK HARNESS
SUPREMA
G410280

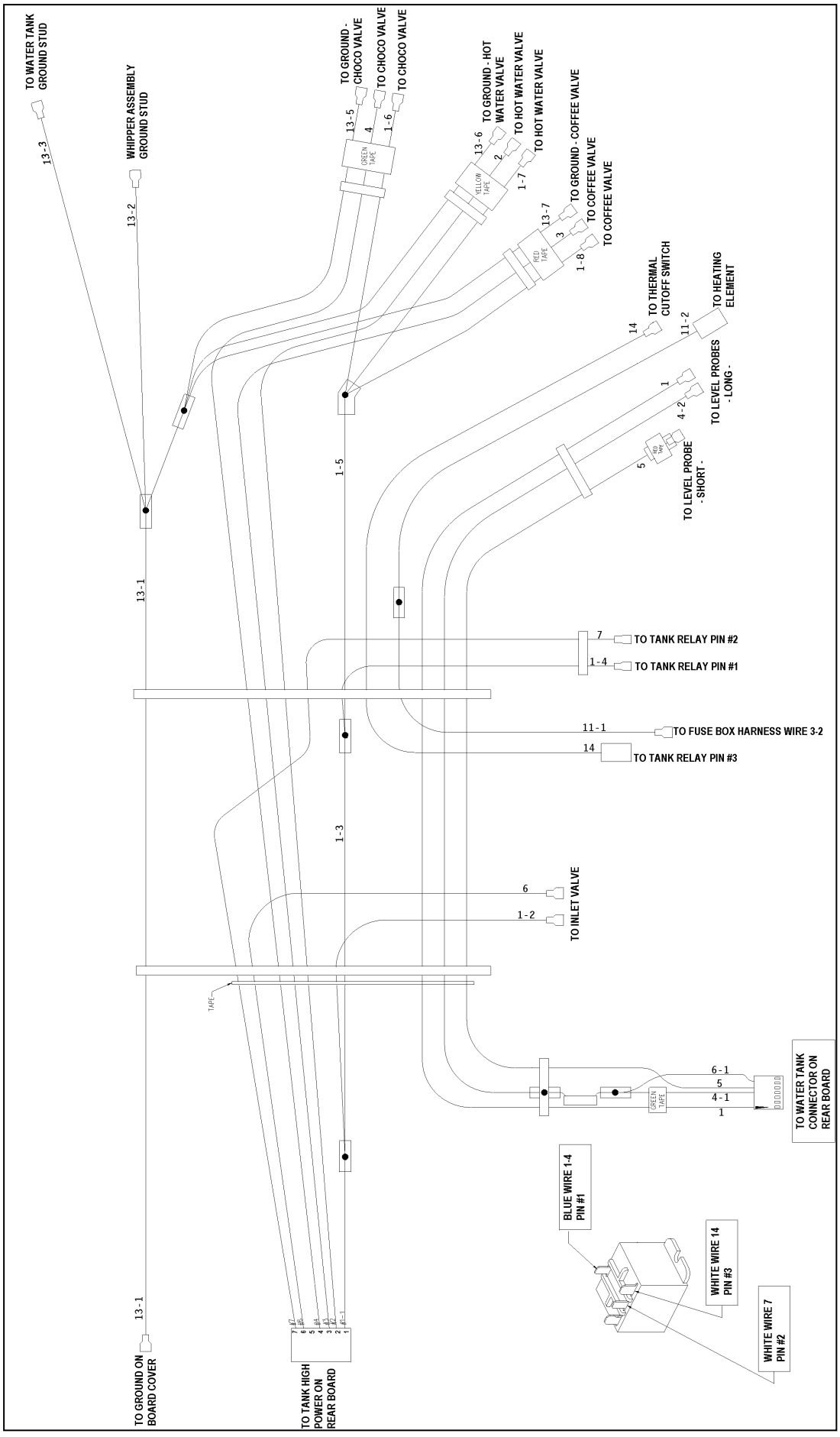

COIN CHANGER INSTALLATION

INSTALLING THE COIN CHANGER

To operate this equipment in "**COIN**" mode, an optional Coinco 9300-series changer must be installed. This changer can be purchased from your local Coinco retailer.

> ➢ ***Note:***
> ***The machine power MUST be switched OFF when connection or disconnecting the coin changer. Failure to do so will damage the coin changer and the electronics in the machine.***

1. **Switch the coffee maker "OFF" and open the inner door.**
2. **Loosen the three changer mounting screws on the inside of the front door.**
   a) Using a Phillips screwdriver, loosen (but do not remove) the three mounting screws.
3. **Remove the 'Acceptor' unit from the coin changer.**
   a) Lift the two locking tabs on top of the coin changer.
   b) Pull the acceptor towards you. It will pivot, with the base portion remaining in place.
   c) Disconnect the ribbon cable and remove the acceptor.
4. **Set the changer to accept and reject certain currencies and denominations of coins.**
   a) Locate the DIP switches on the inside of the coin changer and adjust them accordingly. Consult the diagram below for the function of each switch.

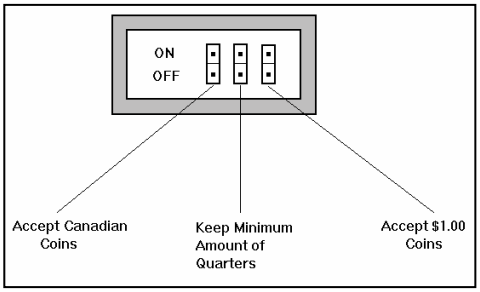

5. **Slide the 'key-hole' slots of the changer onto the mounting screws.**
   a) Having removed the acceptor, you will see three 'key-hole' slots on the rear wall of the changer. Align these slots with the three mounting screws on the inside of the door. It may be necessary to hold the coin reject assembly (on inside top of coffee maker) up and out of the way.
   b) Slide the changer down until the three screws line up with the narrow part of the 'key-hole' slots.
   c) Tighten the three screws enough to secure the changer. Do not over-tighten.

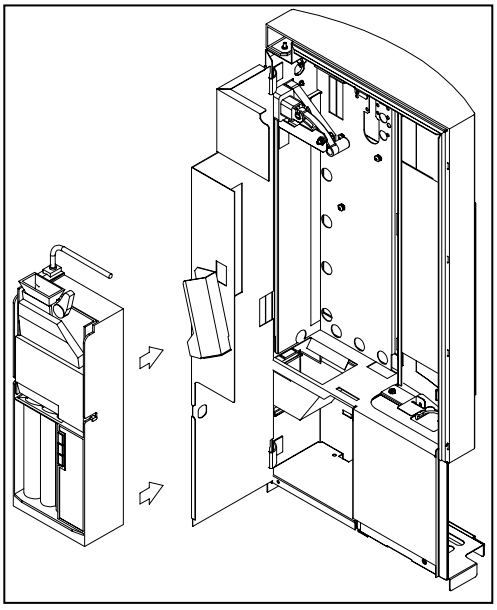

6. **Partially fill the pay-out tubes with an appropriate amount of coins.**
7. **Reconnect the ribbon cable and re-install the 'Acceptor' unit.**
8. **Plug the changer into the receptacle on the inside top of the door.**
9. **Switch the coffee maker "ON".**

INSTALLING THE PRICING DECALS

Although the Suprema has an LCD display that indicates the price when a beverage is selected, you may also want to install pricing decals onto the graphics sheet found on the bezel on the outside of the front door. The following procedure describes how to install the pricing decals.

1. **Place your hands on the top and bottom of one side of the protective plastic cover.**
2. **Grip the side of the plastic and pull it inwards to free it from the bezel.**

Remove the clear plastic cover and the graphics sheet from the bezel.

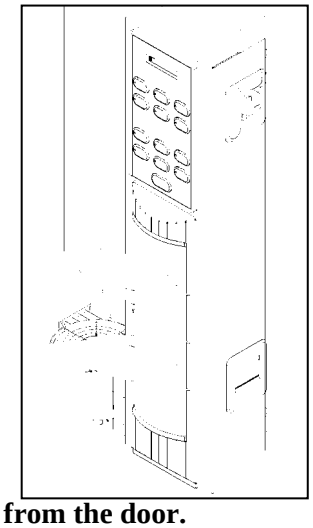

3. **Once the plastic cover is loose, remove it from the door.**
4. **Remove the graphics sheet from behind the plastic cover.**
5. **Using the decal sheet provided, peel off the product, cup size and price decals required and stick them onto the graphics sheet.**

Example of the pricing decal layout on the graphics sheet.

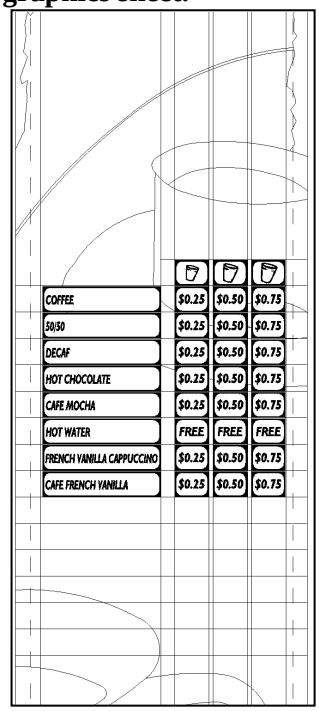

6. **Once done, place graphics sheet inside the plastic cover.**
7. **Place plastic cover (and graphics) into the track on one side of the bezel.**
8. **Pull the other side of the plastic cover (with the graphics) inwards and lock it into the track on the other side of the bezel.**