110870-ISS 3/99

NEWCO *FC SERIES*

F C S E R I E S B R E W E R M O D E L S
R E P L A C E M E N T P A R T S C A T A L O G U E

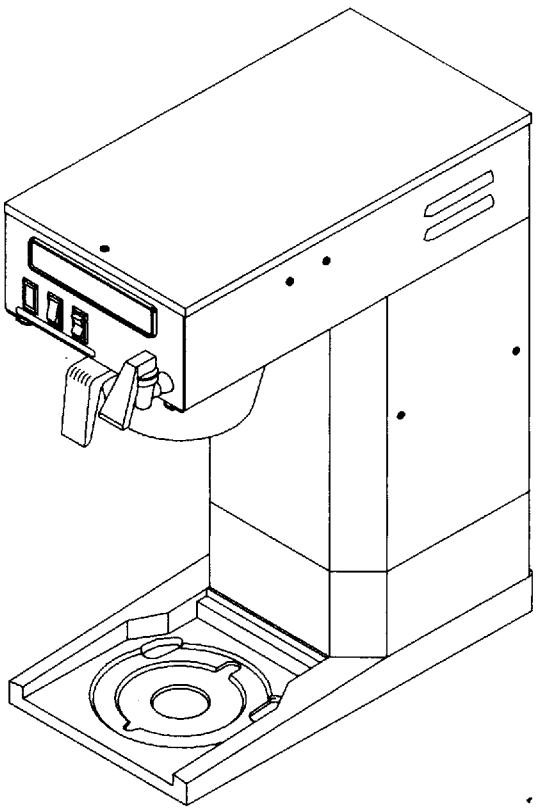

- FC-AP
- FC-TD
- FC-LD
- FC-3
- FC-S3
- FC-S

SEE REAR PANEL FOR
MODEL ILLUSTRATIONS

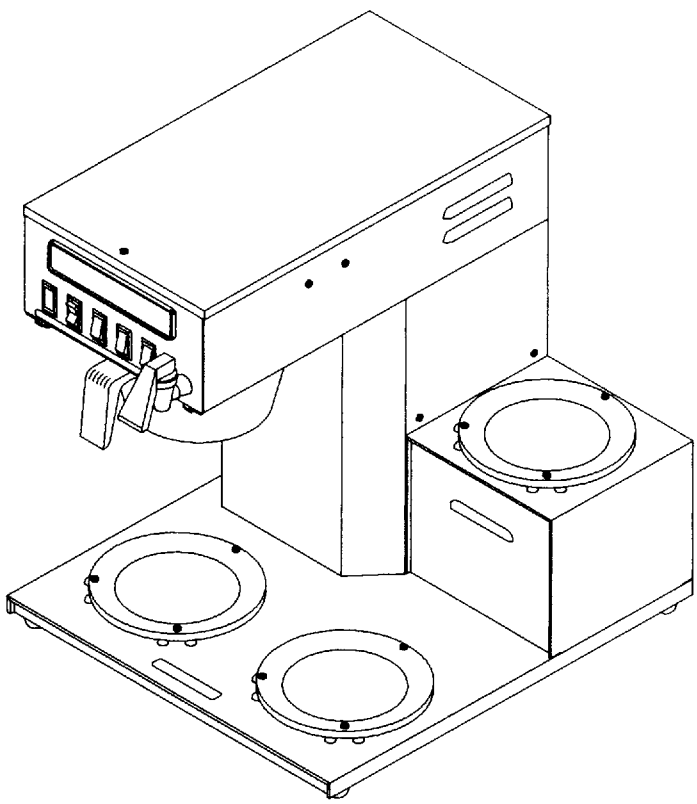

NEWCO ENTERPRISES INC.

1735 S. River Rd • St. Charles, MO 63303 • 1.800.325.7867 • FAX 314.925.0029

BODY ASSEMBLY

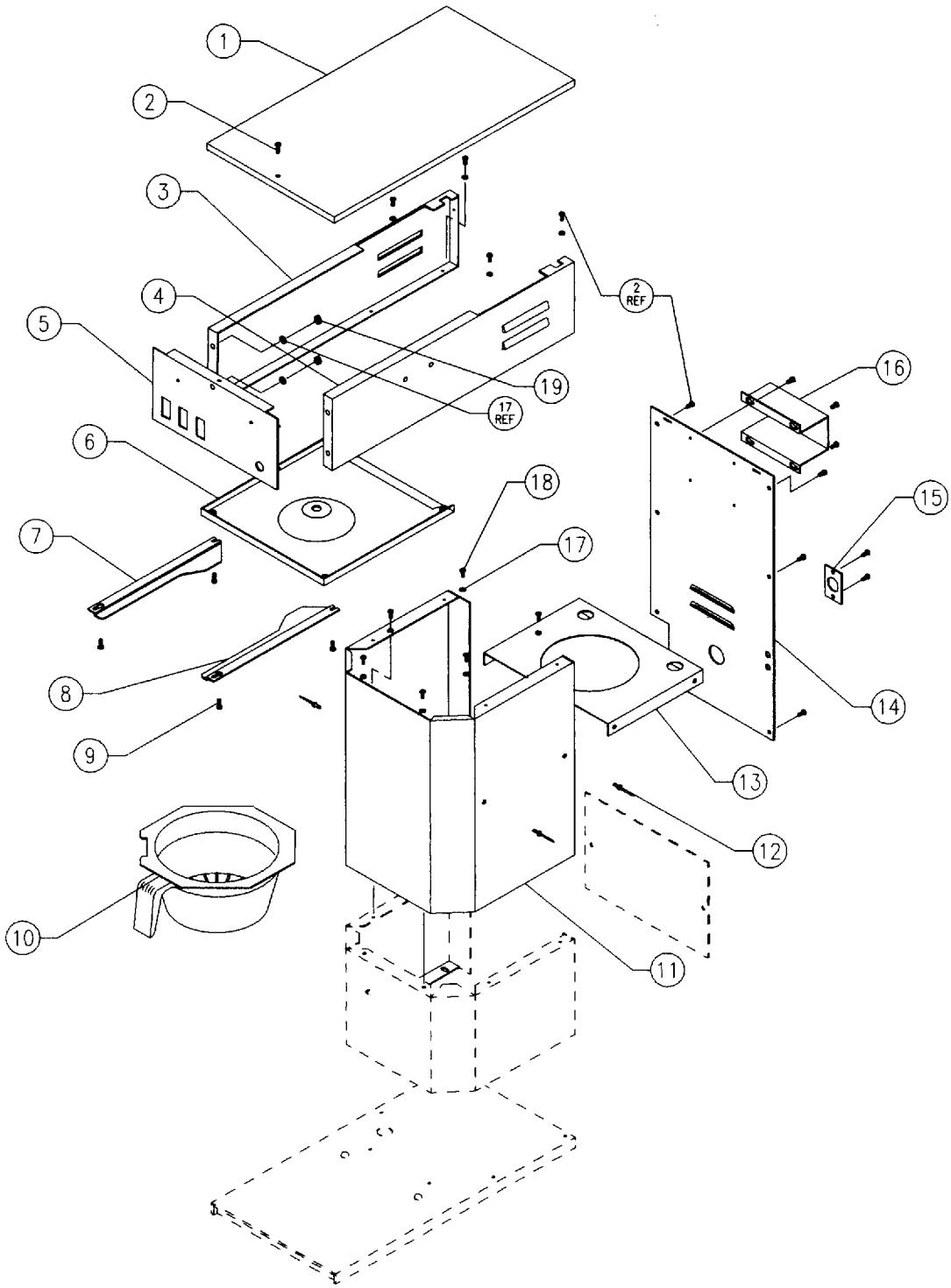

Item	Part No	Description
1	102789	Cover, Plain
1	102791-B	Cover Assy, 2 Sta Warmer
2	102333	Screw, 6-32 X 3/8"
3	101812	Wrapper, Upper, LH
4	101828	Wrapper, Upper, RH
5	101831-B	Face Plate, Black, AP, TD, LD, S
5	101837-B	Face Plate, Black, 3 Sta Warmer Models
6	101777	Brew Plate
7	102800	Brew Rail, LH
8	102799	Brew Rail, RH
9	100065	Screw, 6-32 X 5/16

Item	Part No	Description
10	781513	Brew Basket, Black, Round Flange
10	700118	Brew Basket, Black, Wide Base 8 Sided
11	101868	Column, All Models
12	100192	Rivit
13	101860	Shelf, Tank
14	101990	Panel, Main Rear, All Models
15	101898	Plate, Cord
16	101989	Bracket, Filter
17	100054	Washer, #8 Lock
18	511027	Screw, 8-32 X 3/8"
19	100061	Nut, 8-32 Hex

CONTROL BOARD, SWITCHES, FAUCET AND DUMP VALVE ASSEMBLY

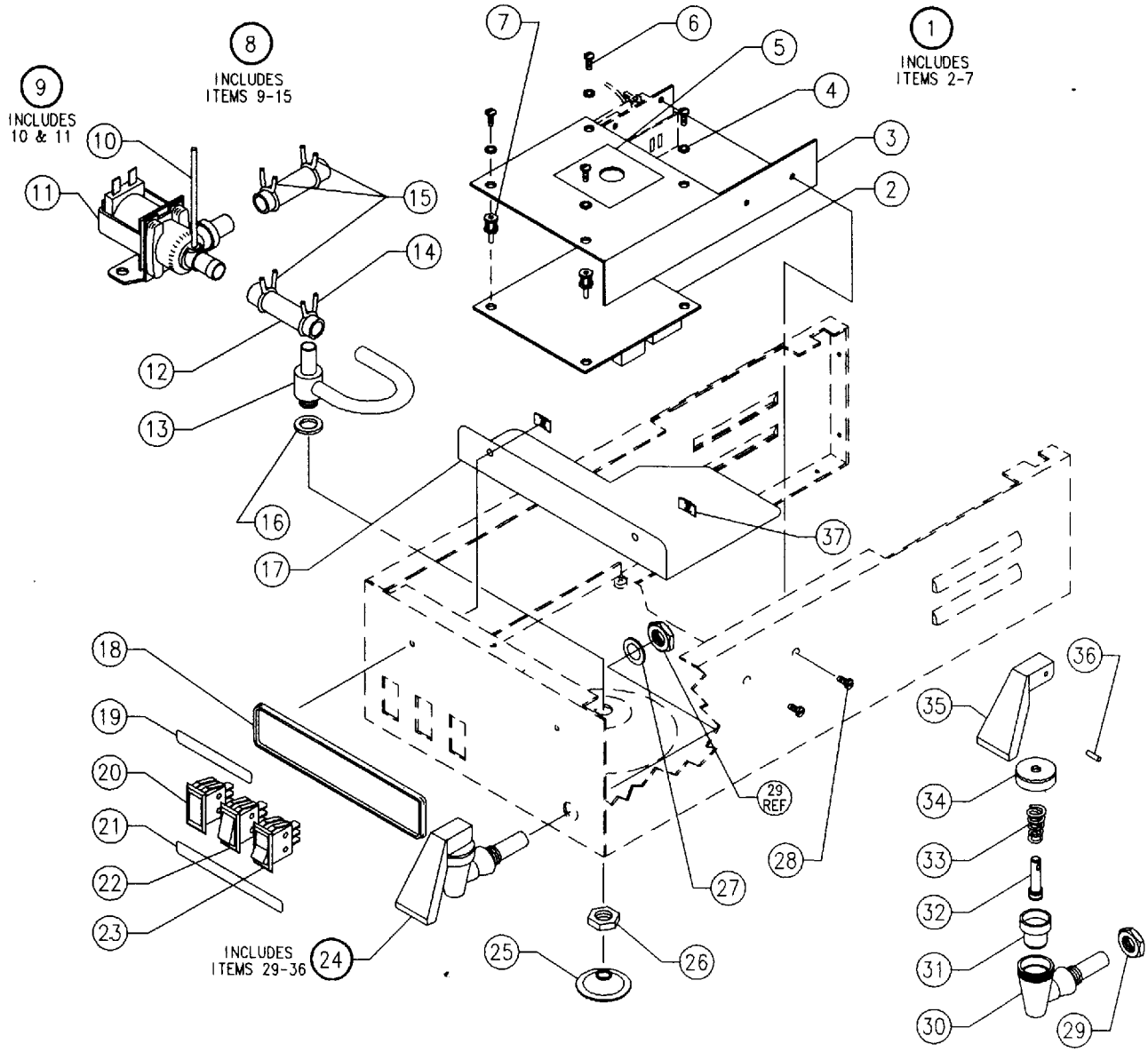

Item	Part No	Description
1	101867	Control Board Assembly - Includes Items 2-7
2	101394	Control Board
3	101866	Bracket, Control Board
4	100212	Washer, #6
5	101889	Label, Control Board
6	102333	Screw, 6-32 X 3/8"
7	110581	Support, Screw Mounted Type
8	108420	Valve Assembly, W/Vent. Includes Items 9-15
9	105095	Valve, With Vent. Includes Items 10 & 11
10	105082	Tube, S/S .134 OD x 2.875
11	105092	Valve, With Vent Hole
12	701982	Tube, 3/8" ID X 5/8" OD X 2" Silicone
13	101835	Tube Assembly, Sprayhead
14	102666	Clamp, S/S #9
15	152461	Clamp, S/S #10
16	100025	Gasket, Sprayhead
17	101959	Barrier, Insulating
18	100058	Nameplate, Newco
18	101384	Nameplate, First Choice
19	101883	Label, "Warmer Controls"
20	702062	Light, 120 V, Green Rectangular "Ready"
20	701449	Light, 120 V, Red Rectangular "Heating"
21	110927	Label, "Heating Brew Start Lower Front Rear"
21	110928	Label, "Ready Brew Start Lower Front Rear"
21	101887	Label, "Ready Power Brew Start"
21	110829	Label, "Heating Power Brew Start"
22	100085	Switch, Lighted SPST, Red Rocker
23	201985	Switch, SPST, Momentary, Brew Start (Black)
24	110885	Faucet Assembly. Includes Items 29-36
25	100024	Sprayhead, 5 Hole S/S
26	201173	Nut, 7/16-20 Sprayhead
27	101011	Washer, 1/2" Lock
28	511027	Screw, 8-32 X 3/8
29	N/A	Nut, Faucet
30	N/A	Faucet Body
31	102675	Seat Cup
32	203851	Stem
33	100612	Spring
34	N/A	Cap
35	100639	Pin
36	102786	Handle, Red
37	100184	Clip, #6 Tinnerman, Flat Type

ELECTRICAL AND PLUMBING CONNECTION COMPONENTS

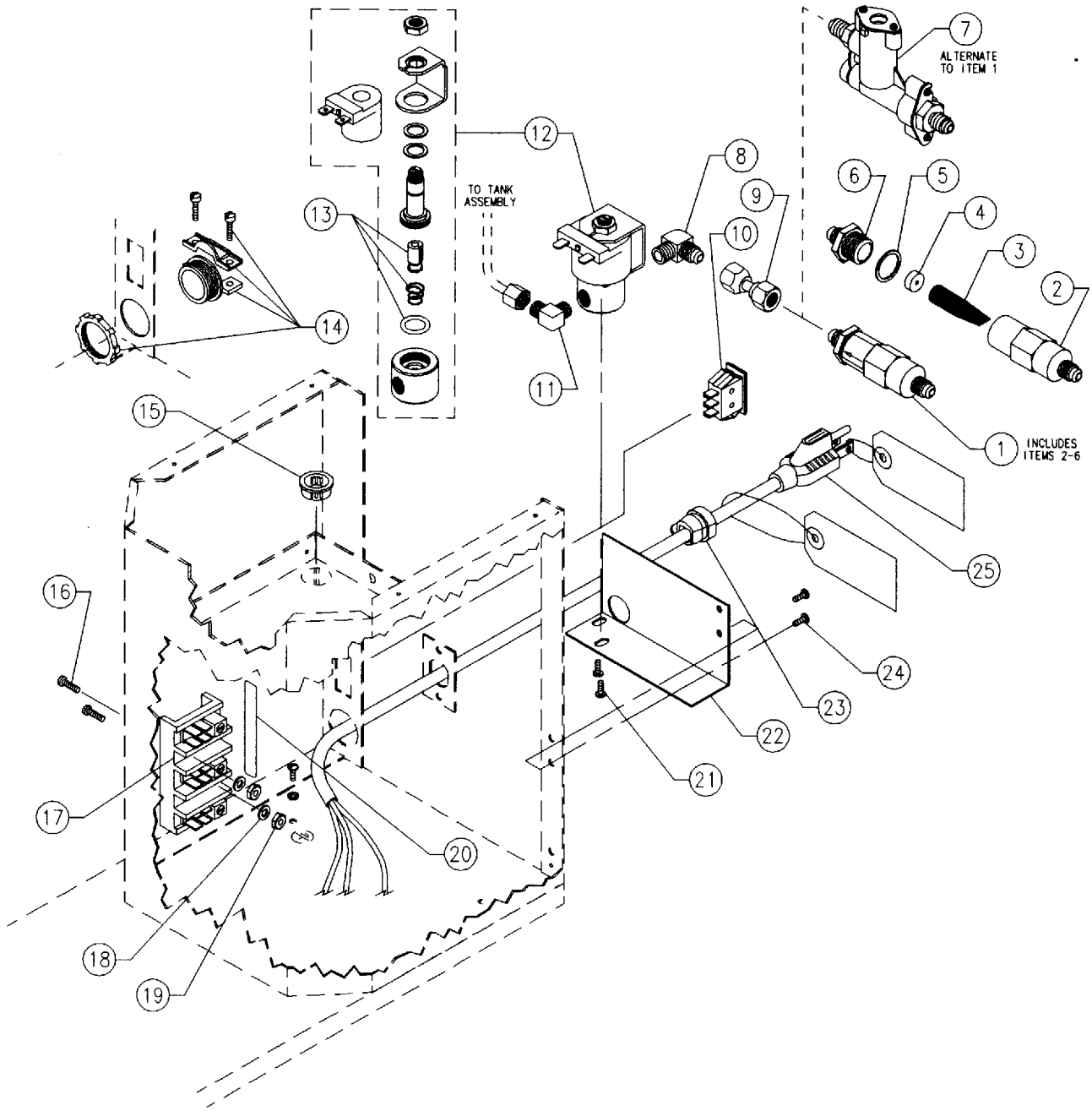

Item	Part No	Description
1	101350	Flow Assembly, !/4 Flare X 1/4 Flare
2	202052	Body, 1/4 Flare
3	100299	Screen
4	100298	Washer, .35 gpm Flow Control
5	790019	Gasket, Nylon
6	100294	Cap, 1/4 Flare
7	110305	Flow Assembly, PDS - See PDS Parts Guide For Replacement Parts Data
8	100177	Elbow, Male 1/8 NPT X 1/4 Flare
9	100161	Tube, 1/4 Flare Assembly
10	100500	Switch, SPST, ON/OFF (Tank)
11	100149	Elbow, Male 1/4 Comp X 1/8 NPT
12	100255	Valve, Solenoid

Item	Part No	Description
13	101527	Kit, Valve Repair
14	511054	Connector, Cable, Strain Relief 240V
15	100003	Bushing, 3/4" Snap
16	704224	Screw, 6-32 X 7/8"
17	511053	Terminal Block
18	100212	Washer, #6
19	100191	Nut, #6
20	202863	Label, "L1 N L2"
21	100613	Screw, 10-32 X 1/4"
22	101993	Bracket, Solenoid
23	101035	Grommet, Strain Relief, 15A Cord
24	511027	Screw, 8-32 X 3/8
25	100022	Cord, 15A Power, 120V Brewers

TANK AND TANK LID ASSEMBLIES

	Part No	Description
	101995	Tank Assembly, 1400W 120V
	110370	Tank Assembly, 1100W 120V
	110262	Tank Assembly, 3500W 240V
	101988	Lid Assembly, Tank. Incl 1, 2, 3, & 4

The above tank assemblies include all item numbers shown except for items 1-4 and 31-34

Item	Part No	Description
1	102801	Probe, Water Level
2	102836	Grommet, Silicone
3	152207	Plug, Silicone Tank
4	781507	Lid, Punched Tank
5	102581	Element, 1100W 120V Tank (Incl 5, 6 & 12)
5	102580	Element, 1400W 120V Tank (Incl 5, 6, & 12)
5	100071	Element, 1750W 120V Tank (Incl 5, 6, & 12)
5	102850	Element, 3500W 240V Tank (Incl 5, 6, & 12)
6	100409	Gasket, .515 ID
7	100431	Nut, 9/16-24, 11/16 Brass Hex
8	100030	Gasket, .562 ID
9	201112	Insert, 1/4" Tubing
10	100633	Thermostat, Manual Reset Hi-Limit
10	100174	Thermostat, Auto Reset Hi-Limit, 240 V
11	102835	Fitting, Bulkhead Outlet
12	100190	Nut, 1/2-20 Brass Jam
13	100269	Bracket, Manual Reset Hi-Limit T-stat
13	100143	Bracket, Automatic Reset Hi-Limit T-stat, 240V
14	101135	Tube, 1/4" ID X 3/8" OD X 6.5" Silicone
15	102874	Tube, 3/8" ID X 5/8" OD X 9" Silicone
16	100440	Clamp, 3/8" Tube
17	152461	Clamp, S/S #10
18	704227	Thermostat, Regulating
19	700387	Plate, Spreader
20	100642	Element, Warmer 220V 100W (110V 25 W)
21	100086	Plate, Element Support
22	100054	Washer, #8 Lock
23	100061	Nut, 8-32 Hex
24	100175	Grommet, Silicone, With Slit
25	100209	Clip, Capillary Bulb
26	152701	Tube, 3/8" OD, S/S Fill
27	100170	Nut, 3/8" Compression
28	100166	Sleeve, 3/8" Brass Compression
29	101863	Tank, Spotwelded
30	101720	Connector, Fem 3/8" Comp X 1/8 NPT
31	100445	Tube, 3/16" ID X 1/4" OD X 12.25" Teflon
32	202044	Insert, 3/16" Tubing, Brass
33	102328	Nut, 1/4 Compression, Reamed 7.2mm
34	202047	Sleeve, 1/4" Plastic Tubing
35	100149	Elbow, Male 1/4 Comp X 1/8 NPT
36	781181	Gasket, 23" Silicone Tank

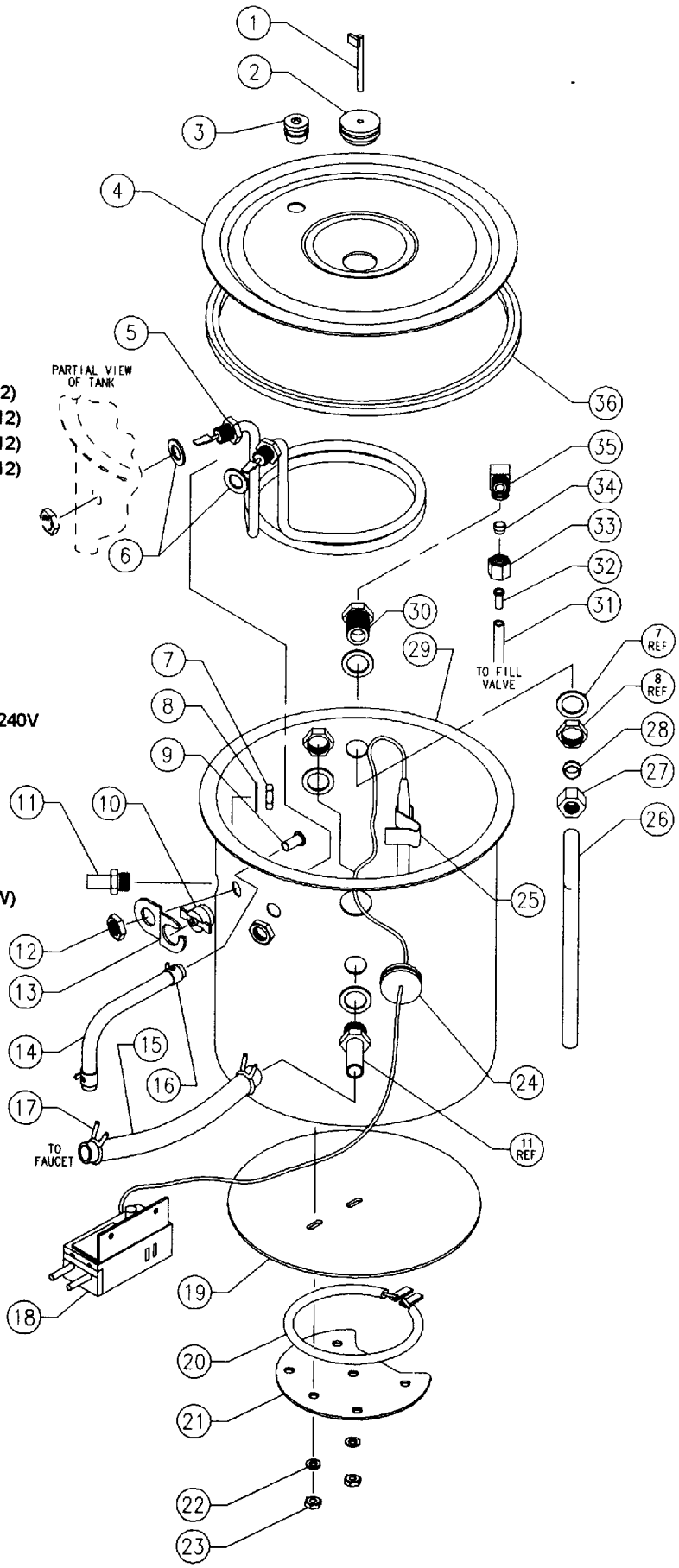

DISPENSER AND AIRPOT MODEL BASE ASSEMBLIES

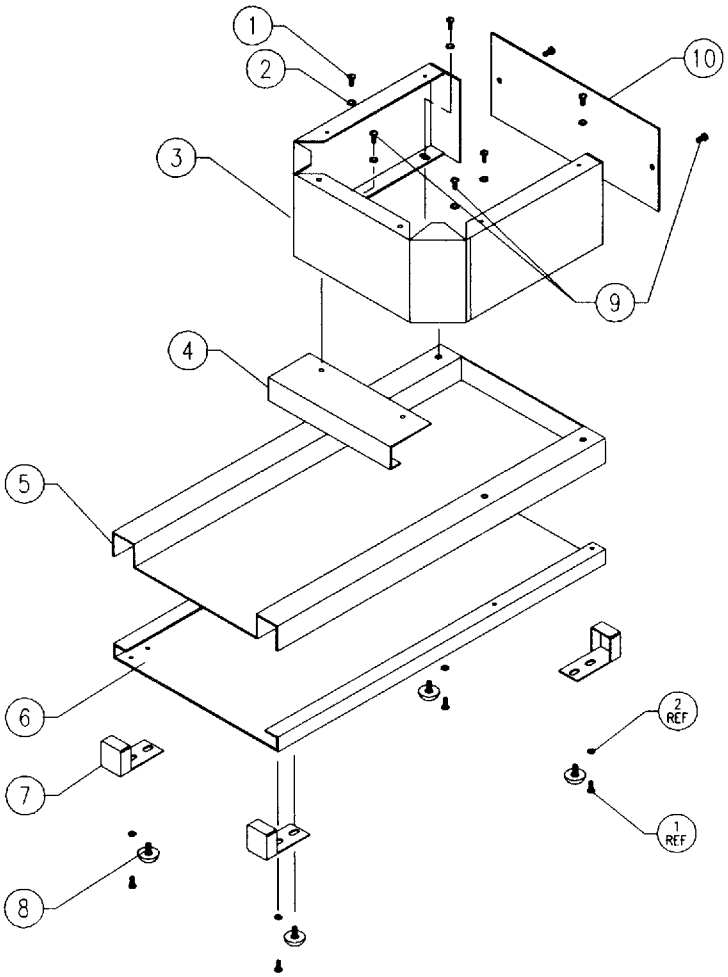

LD and TC BASE ASSEMBLY

Item	Part No	Description
1	511027	Screw, 8-32 X 3/8
2	100054	Washer, #8
3	101984	Riser 2-13/16" (Special)
3	110022	Riser 3-9/16", LD
3	110149	Riser 4-5/16" (Special, Ralph's)
4	101736	Bracket, LD Stop (Not Included in base assy)
4	101846	Bracket, S Stop (Not Included in base assy)
5	101853	Base Top, LD
5	101814	Base Top, LD 240V
5	101854	Base Top, S
6	101739	Base Bottom, LD
6	101847	Base Bottom, S
7	101740	Cap, S/S, LD End
7	101845	Cap, S/S, S End
8	100078	Foot, Bumper
9	102333	Screw, 6-32 X 3/8"
10	101999	Back, Riser 2-13/16" (Special)
10	110023	Back, Riser 3-9/16", LD
10	110148	Back, Riser 4-5/16" (Special, Ralph's)

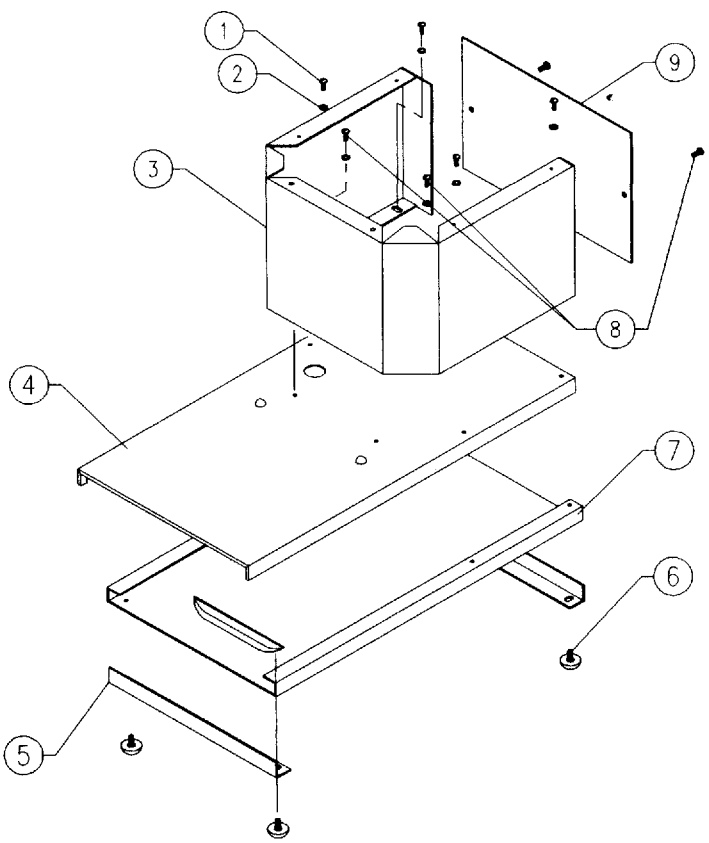

AIRPOT and DISPENSER BASE ASSEMBLIES

Item	Part No	Description
1	511027	Screw, 8-32 X 3/8
2	100054	Washer, #8
3	110994	Riser 5-11/16", AP
3	101876	Riser 9-3/4", TD
4	102763	Base Top, Dispenser
4	102761	Base Top, Dispenser 240V
4	102931	Base Top, Airpot
4	102893	Base Top, Airpot 240V
5	102825*	Plate, S Base Trim
6	100078	Foot, Bumper
7	102764	Base Bottom, Dispenser
7	102794	Base Bottom, Airpot
8	102333	Screw, 6-32 X 3/8"
9	110993	Back, Riser 5-11/16", AP
9	101870	Back, Riser 9-3/4", TD

* Part number shown is for the Stainless Steel version.
When ordering add -B to part number for black parts where available.

ALTERNATE ABS THERMAL BASE ASSEMBLIES

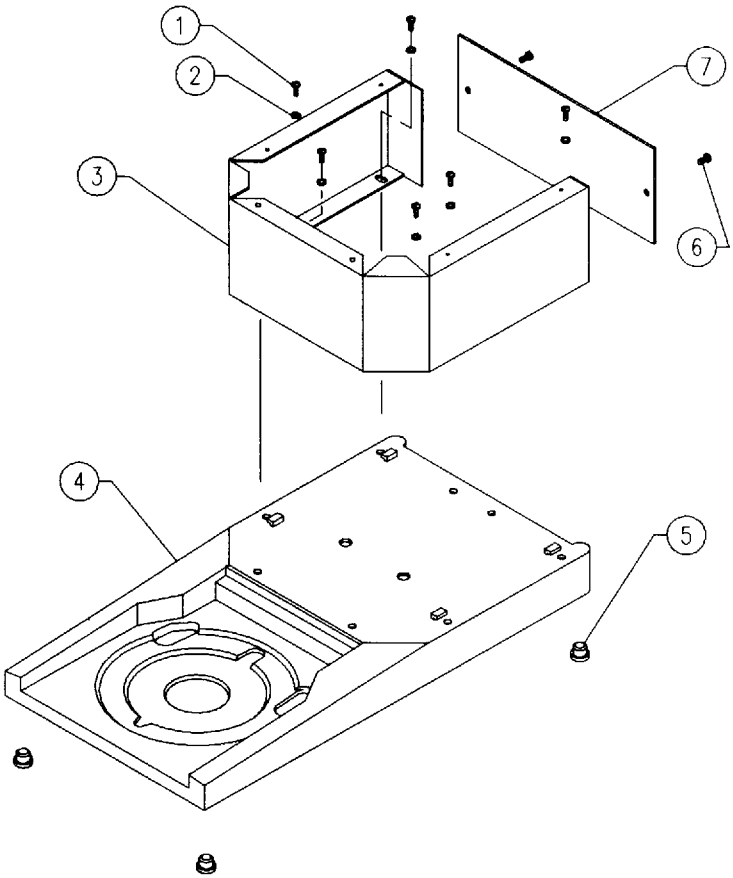

LD and TC BASE ASSEMBLY

Item	Part No	Description
1		Screw, #8, Thread Forming
2	100054	Washer, #8
3	101984	Riser 2-13/16" (Special)
3	110022	Riser 3-9/16", LD
3	110149	Riser 4-5/16" (Special, Ralph's)
4		Base, LD/TC, ABS
5	100665	Toe, Rubber
6	102333	Screw, 6-32 X 3/8"
7	101999	Back, Riser 2-13/16" (Special)
7	110023	Back, Riser 3-9/16", LD
7	110148	Back, Riser 4-5/16" (Special, Ralph's)

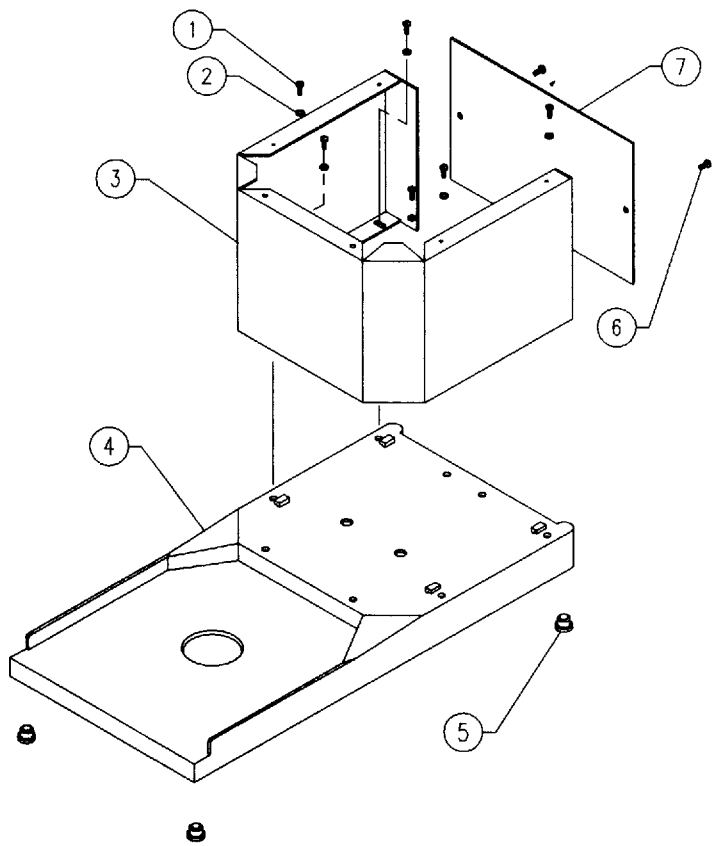

AIRPOT and DISPENSER BASE ASSEMBLIES

Item	Part No	Description
1		Screw, #8, Thread Forming
2	100054	Washer, #8
3	110994	Riser 5-11/16", AP
3	101876	Riser 9-3/4", TD
4		Base, Dispenser/Airpot
5	100665	Toe, Rubber
6	102333	Screw, 6-32 X 3/8"
7	110993	Back, Riser 5-11/16", AP
7	101870	Back, Riser 9-3/4", TD

WARMER MODEL BASE ASSEMBLIES

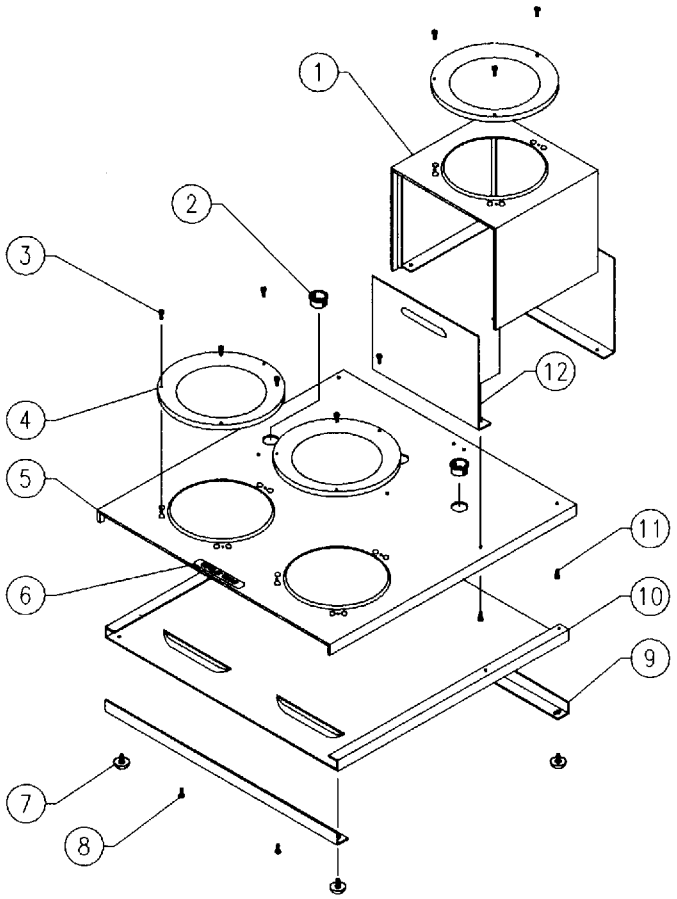

LOW PROFILE BASE ASSEMBLY

Item	Part No	Description
1	101896	Step Up, Warmer
2	100003	Bushing, 3/4" Snap
3	100160	Screw, 4-40 X 5/8"
4	100010	Warming Plate Assembly, Black 120V 100W
5	102811	Base Top, LP
6	100254	Decal, "CAUTION:HOT SURFACES"
7	100078	Foot, Bumper
8	511027	Screw, 8-32 X 3/8
9	102826*	Plate, LP Base Trim
10	102814	Base Bottom, LP
11	102333	Screw, 6-32 X 3/8"
12	101897	Plate, Warmer Step Up Louvred Trim

* Part number shown is for the Stainless Steel version.
When ordering add -B to part number for black parts where available.

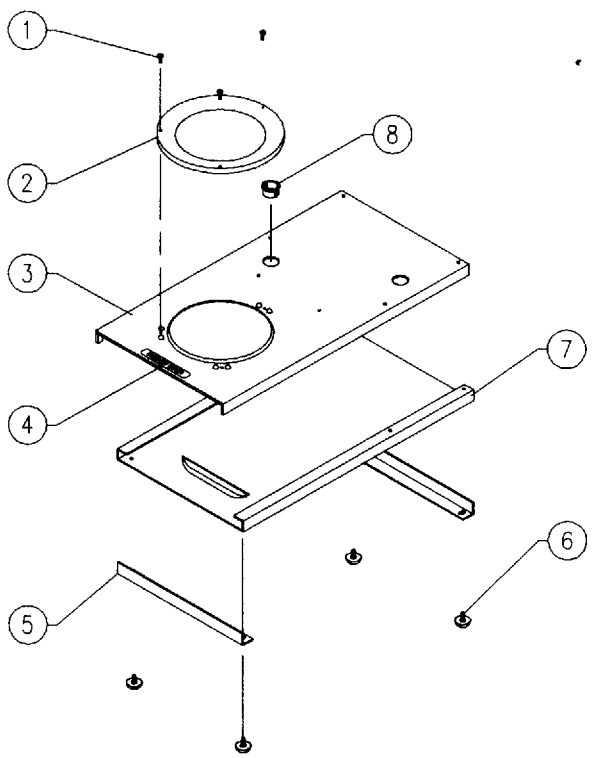

IN LINE BASE ASSEMBLY

Item	Part No	Description
1	100160	Screw, 4-40 X 5/8"
2	100010	Warming Plate Assembly, Black 120V 100W
3	102792	Base Top, S
4	100254	Decal, "CAUTION:HOT SURFACES"
5	102825*	Plate, S Base Trim
6	100078	Foot, Bumper
7	102794	Base Bottom, S
8	100003	Bushing, 3/4" Snap

* Part number shown is for the Stainless Steel version.
When ordering add -B to part number for black parts where available.

COVER ASSEMBLY

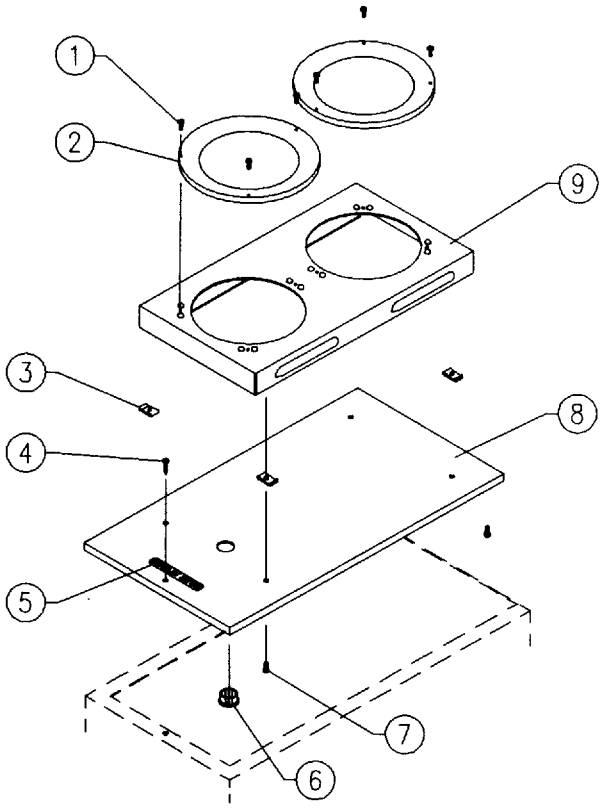

S3 MODEL COVER ASSEMBLY

Item	Part No	Description
1	100160	Screw, 4-40 X 5/8"
2	100010	Warming Plate Assembly, Black 120V 100W
3	100197	Clip, #8 Tinnerman
4	102333	Screw, 6-32 X 3/8"
5	100254	Decal, "CAUTION:HOT SURFACES"
6	100003	Bushing, 3/4" Snap
7	511027	Screw, 8-32 X 3/8
8	102790	Cover, 2 Station Blank
9	705370	Stove, 2 Station

AP, LD, 3, S, TD COVER

Item	Part No	Description
7	102789	Cover, Plain

WARMER ASSEMBLY

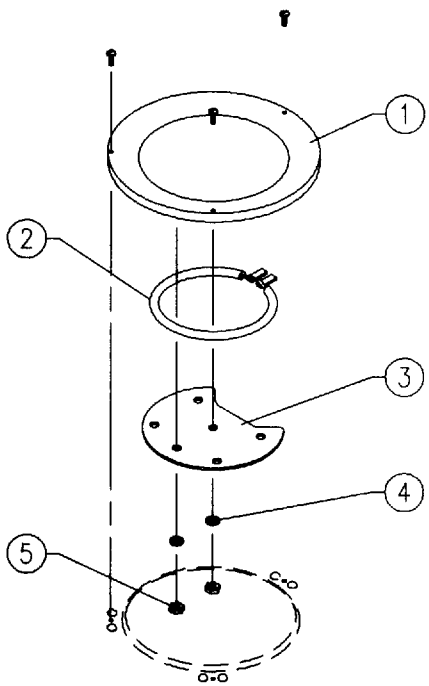

WARMER PLATE ASSEMBLY

Item	Part No	Description
1	100008	Warming Plate, Black
2	100187	Element, Warmer 120V 100W
3	100086	Plate, Element Support
4	100054	Washer, #8 Lock
5	100061	Nut, 8-32 Hex

WIRING HARNESSES and WIRE ASSEMBLIES

Item Numbers in Table Below Correlate to Leader Numbers in Wiring Diagrams on Page 11

Item	Part No	Description	-LD, S, AP, TD	-3	-S3	120 V	120/ 240 V	Auto Arm	Ready
1	101807	Harness, CN1, 6 Pole Control Board	X	X	X	X	X	X	X
2	101806	Harness, CN2, 7 Pole Control Board	X	X	X	X	X	X	X
3*	110004*	Lead, 18 Ga, Black, 11", 1S-1	X	X	X	X	X		X
4	110000	Harness, Switch, Ready Light	X	X	X	X	X	X	X
5	103049	Lead, 14 Ga, Violet/Black, 5", 1S-1	X	X	X	X	X	X	X
6	110692	Harness, White, FC Neutral	X	X	X	X	X	X	X
7	110691	Lead, 14 Ga, Violet/White, 16.5", 1S-1	X	X	X	X		X	X
7	311168	Lead, 14 Ga, Violet/Red, 17", 1S-1	X	X	X		X	X	X
8	101804	Harness, Bk, Tank Warmer, Thermostat	X	X	X	X	X	X	X
9	700130	Lead, 14 Ga, Violet/Black, 5", 1S-1S	X	X	X	X	X	X	X
10	110001	Harness, Black, Jumper		X	X	X	X	X	X
11	110002	Harness, White, Jumper		X	X	X	X	X	X
12	101822	Lead, 18 Ga, Blue, 36", 1-2, FC-3		X		X	X	X	X
12	705428	Lead, 18 Ga, Blue, 18", 1-1, FC-S			X	X	X	X	X
13	102837	Lead, 18 Ga, Red, 47", 1-2, FC-3		X		X	X	X	X
13	705548	Lead, 18 Ga, Red, 21", 1-1, FC-S			X	X	X	X	X
14	110003	Lead, 18 Ga, Black, 28", 1-2, FC-3/FC-S		X	X	X	X	X	X
15	101983	Harness, Wh, Warmers, 3 Sta Base, FC-3		X		X	X	X	X
15	705418	Lead, 18 Ga, Wh, 14", 1-2, 1 Sta Base, FC-S			X	X	X	X	X
15B	102834	Harness, Wh, Warmers, 2 Sta Cover, FC-S			X	X	X	X	X
16	100022	Cord, Power, 14/3, 120 V, 15 A	X	X	X	X		X	X

* Requires resistor ass'y (102349) on light for 240 V models

WIRING DIAGRAM - THERMAL MODELS

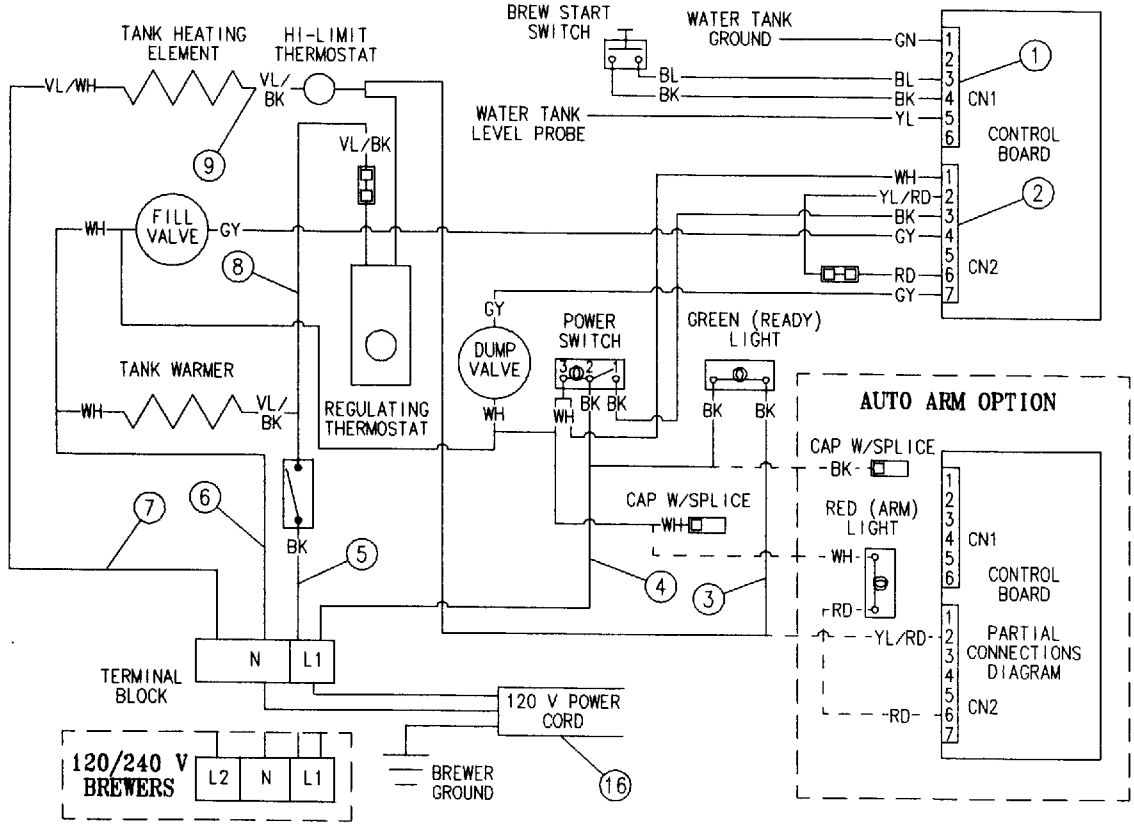

WIRING DIAGRAM - WARMER MODELS

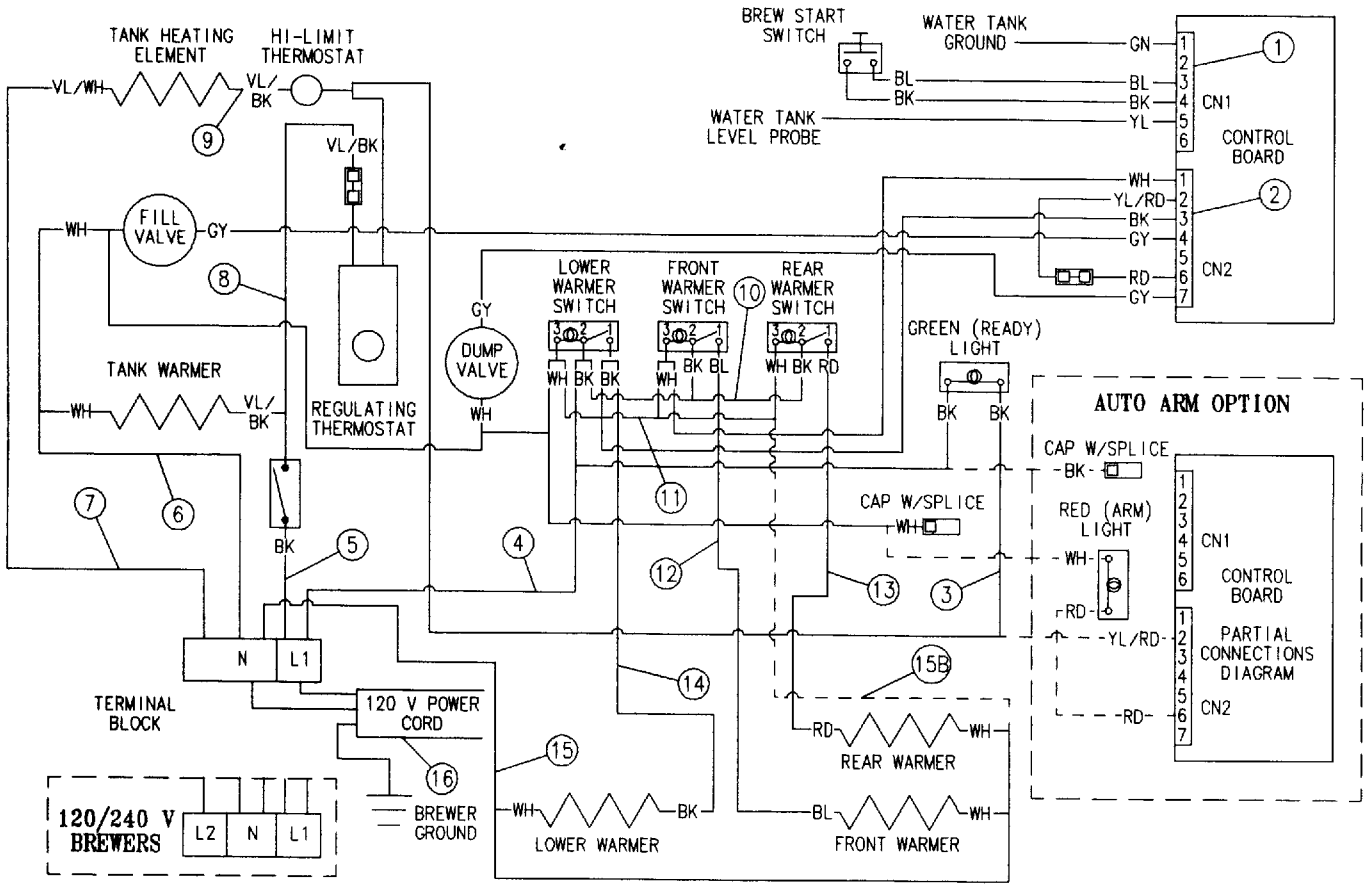

MODEL ILLUSTRATIONS

FC-LD

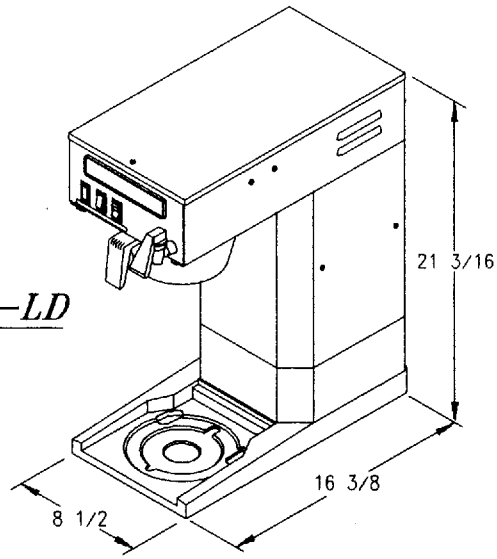

FC-S

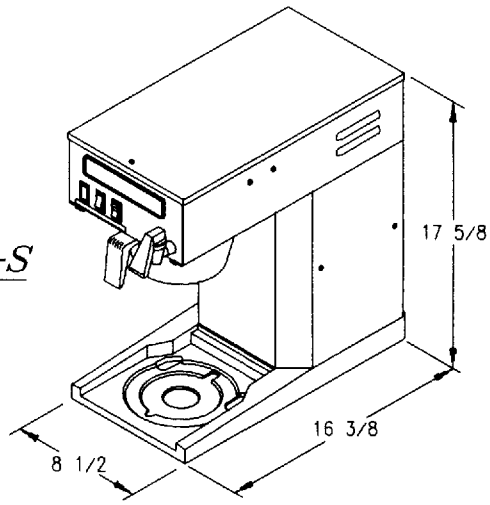

FC-AP

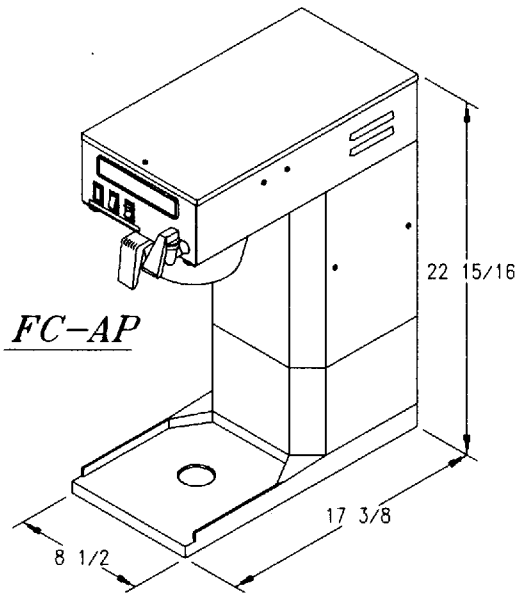

FC-TD

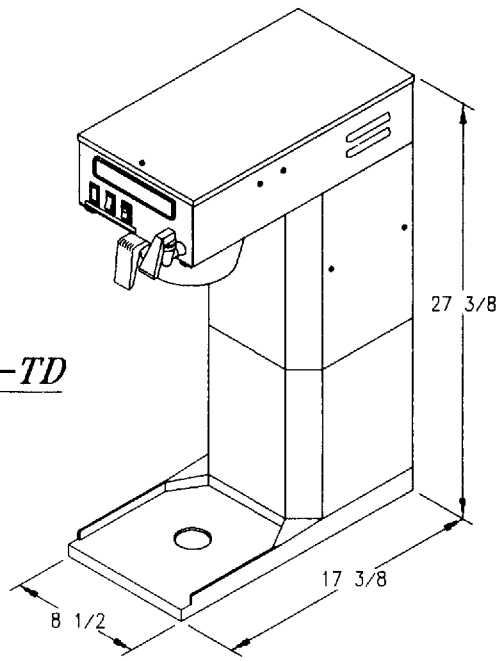

FC-3

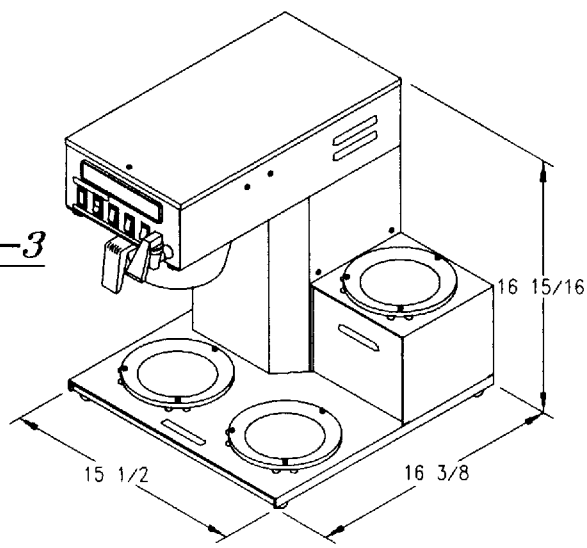

FC-S3

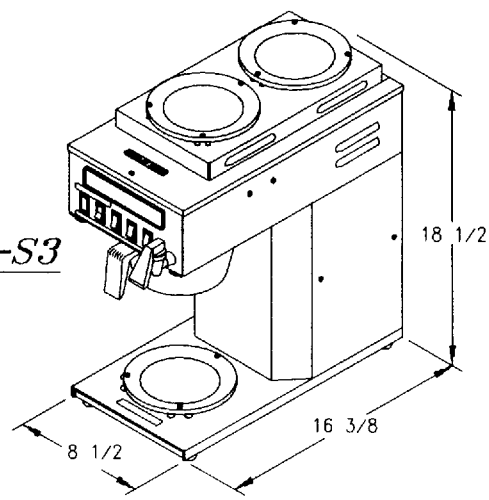

Man P.N. 101970 Rev 0599

NEWCO ENTERPRISES

Installation/Operation Instructions For The FC Series Brewers

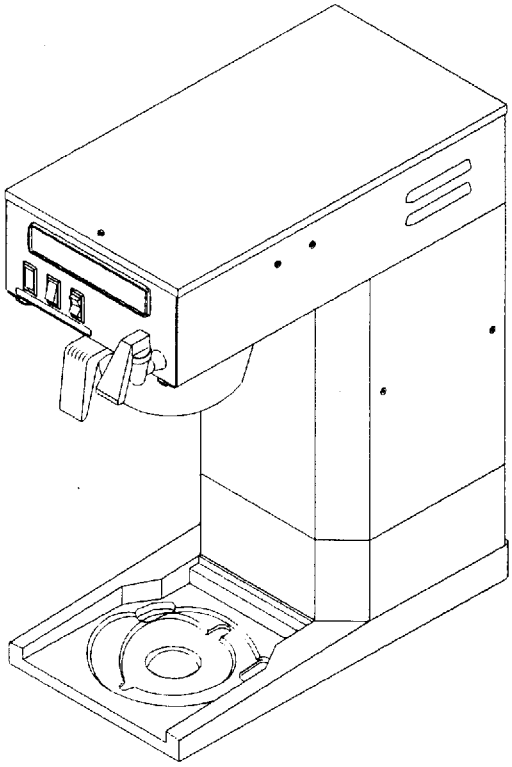

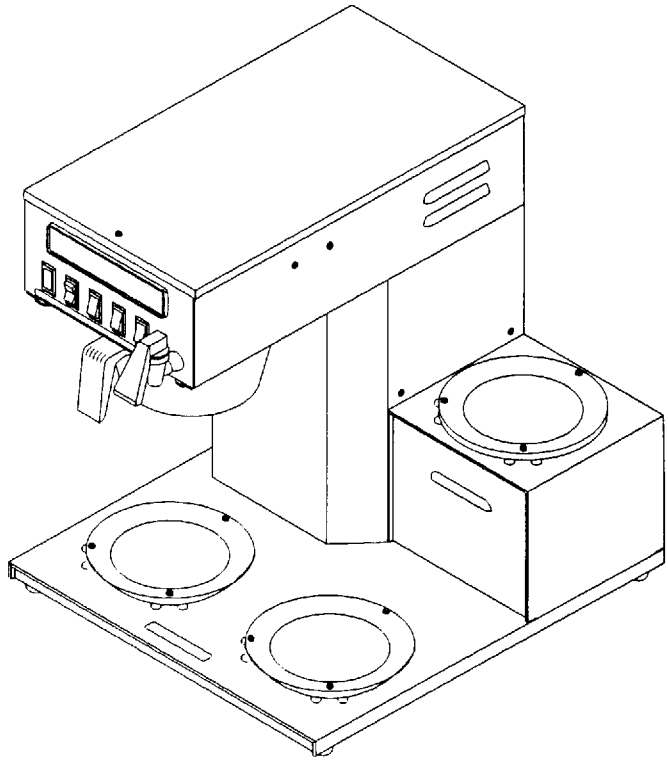

WARRANTY - Newco coffee brewers are warranted against defects in workmanship or materials, under normal use, for 90 days from the date of purchase. Brewer parts are warranted against defect for 12 months from date of purchase.

Liability in all events is limited to the purchase price paid and liability under the aforesaid warranty is limited to replacing or repairing any part or parts which are defective in material or workmanship, and returned to our factory, shipping cost prepaid. No warranty expressed or implied, other than the aforesaid is made or authorized by Newco Enterprises, Inc.

Prompt disposition will be made if item proves to be defective, within warranty. Before returning any item, write or call Newco, or the dealer from whom the product was purchased, giving model number, serial number, and date of purchase, and describe nature of the defect. If damage was incurred during transit to you, file claim with the carrier.

PLUMBER'S INSTALLATION INSTRUCTIONS

1) Flush water line before installing brewer. Brewer should be connected to COLD WATER LINE for best operation.
2) Water pressure should be at least 20 lbs. For less than a 25 ft run, use 1/4" copper tubing and connect to 1/2" or larger water line. For longer runs, use 3/8" copper tubing & connect to 1/2" or larger water line and provide an adapter fitting for connection to the brewer.
3) If installed with saddle valve, the valve should have a minimum of 1/8" port hole for up to 25 ft run, and 5/16" port hole for over 25 ft runs.
4) Connect incoming water line to the flow control attached to the elbow extending from the the back of the brewer. Manufacturer recommends connecting to copper tubing.

INSTALLATION INSTRUCTIONS

WARNING: - Read and follow installation instructions before plugging or wiring in machine to electrical circuit. Warranty will be void if machine is connected to any voltage other than that specified on the name plate.

1) Make sure that the On/Off switch located on the rear of the unit is turned off. This switch controls the tank elements and will prevent their being damaged prior to the tank being filled.

2) Plug or wire brewer to appropriate voltage circuit as indicated on serial tag. Turn lower warmer switch, or power switch on dispenser models, to the on position to supply power to the control board. The tank will begin to fill. The solenoid will shut off when the tank has filled. The brewer has a probe mounted on the tank lid. This probe is designed to sense the water level in the tank. Brewer lid must be on in order for the probe to sense water level. If not on brewer electronics will automatically go into its backup safety timer circuit and turn the fill solenoid off in approximately 7.23 minutes.

3) Turn the master switch (located in rear of equipment) to the ON position. This will activate the tank elements and the tank will begin to come up to operating temperature.

4) Place an empty decanter in position below the brew basket. With the decanter in place turn the lower warmer switch, power switch for dispenser models, to the ON position and depress brew start switch to begin a brew cycle, checking the volume of water delivered into decanter. Adjust timer, located in front of brewer under top cover, to deliver desired amount of water. Turn timer dial clockwise to increase volume of water, counter clockwise to decrease it.

5) Allow 10 to 15 minutes for water in tank to heat to brewing temperature. After water has reached brewing temperature (thermostat will click off and green ready light will be lit) run one cycle to check for the proper temperature setting with an accurate thermometer. Take the temperature of this water at a point below the brew basket opening, at the start of the brew cycle and when the decanter is half full. Recommended temperature of the water is approximately 195 F. (Note: Brew cycle may be canceled by turning the rocker switch back to the OFF position.)

6) In higher altitude locations (5000 feet above sea level) the thermostat may have to be adjusted lower to prevent boiling. Turning adjustment knob in a clockwise direction will decrease water temperature.

7) **CAUTION:** The water faucet will dispense hot water when the handle is depressed. The faucet system may be operated during brew cycle without yielding a short pot.

COFFEE PREPARATION PROCEDURES

1) Place filter into brew basket.

2) Put the proper amount of coffee into the filter.

3) Slide the brew basket into holder.

4) Place the appropriate empty decanter into position below the brew basket. For airpots first open lid and remove pump stem. For other dispensers remove the lid unless it is a brew thru design. Turn lower warmer switch, or power switch for dispenser brewers, to the ON position.

5) Press brew start switch. (Brew cycle may be canceled by turning the lower warmer or power switch to the OFF position.)

6) Hot water will be delivered through the sprayhead. This distributes the hot water evenly over the coffee bed within the brew basket. The coffee brew will drain from the brew basket into the decanter below.

7) The resultant coffee brew should be crystal clear and have the desired properties attainable through excellent extraction.

8) For models with warming plates turn off warmers when not in use. Red light in switch indicates when warmer is on. Note: The solenoid will not run to replace water in tank that is drawn off from the faucet when the lower warmer switch, or power switch for dispenser models, is in the OFF position. However when the brew cycle is again initiated the tank will fill before cycle begins to prevent a short pot.

9) To clean brew basket simply remove from brew rails and dump filter into waste basket. The brewing process, as described above, can now be started again.

THERMAL MODELS

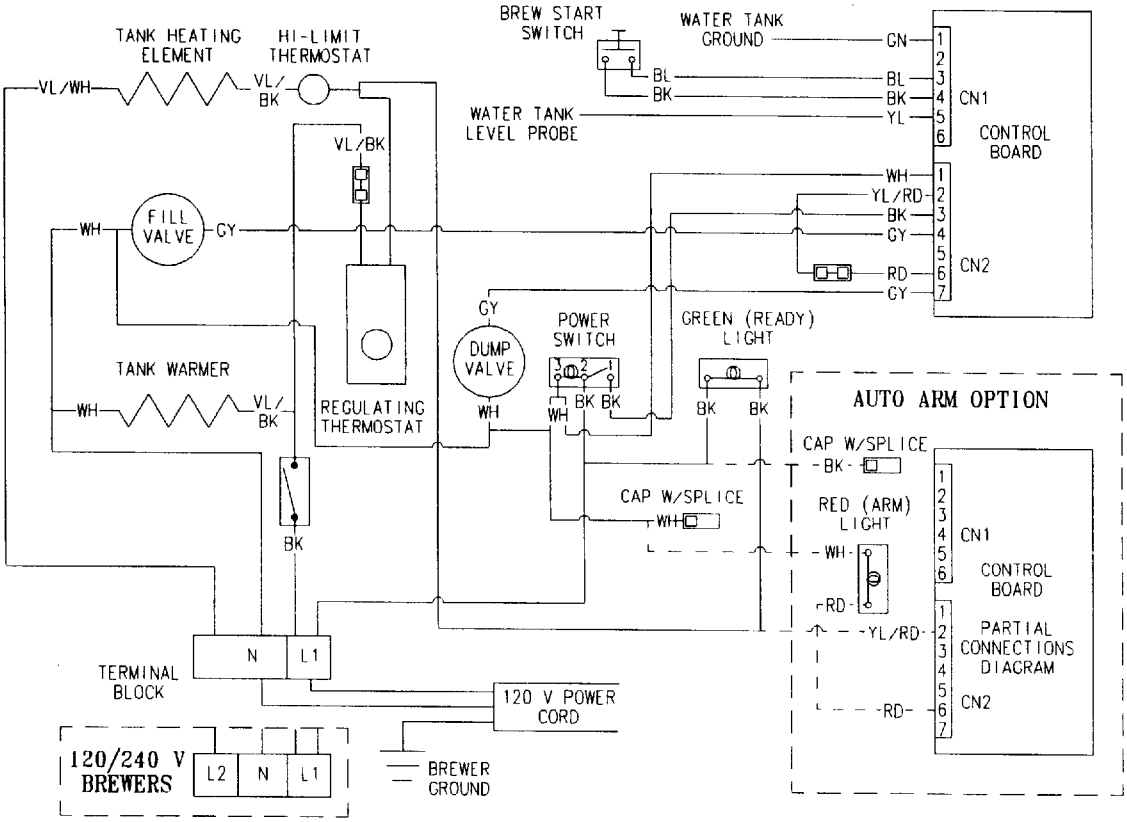
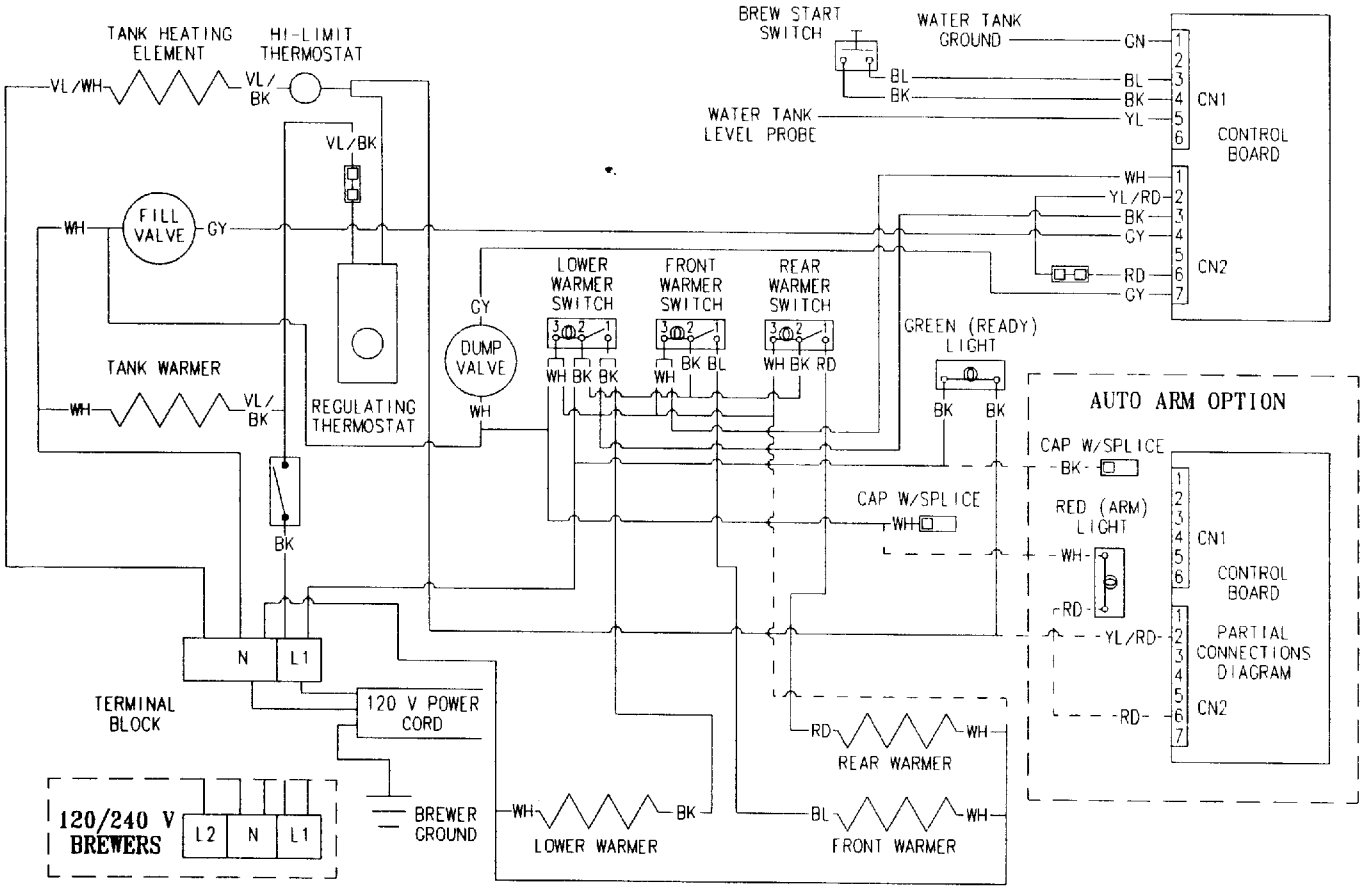
WARMER MODELS